Joint Design of Algorithms and Hardware for Energy-Efficient DNNs

Vivienne Sze

Massachusetts Institute of Technology

In collaboration with Yu-Hsin Chen, Joel Emer, Tushar Krishna, Tien-Ju Yang

Contact Info
email: sze@mit.edu
website: www.rle.mit.edu/eems

Follow @eems_mit

Video is the Biggest Big Data

Over 70% of today's Internet traffic is video
Over 300 hours of video uploaded to YouTube **<u>every minute</u>**
Over 500 million hours of video surveillance collected **<u>every day</u>**

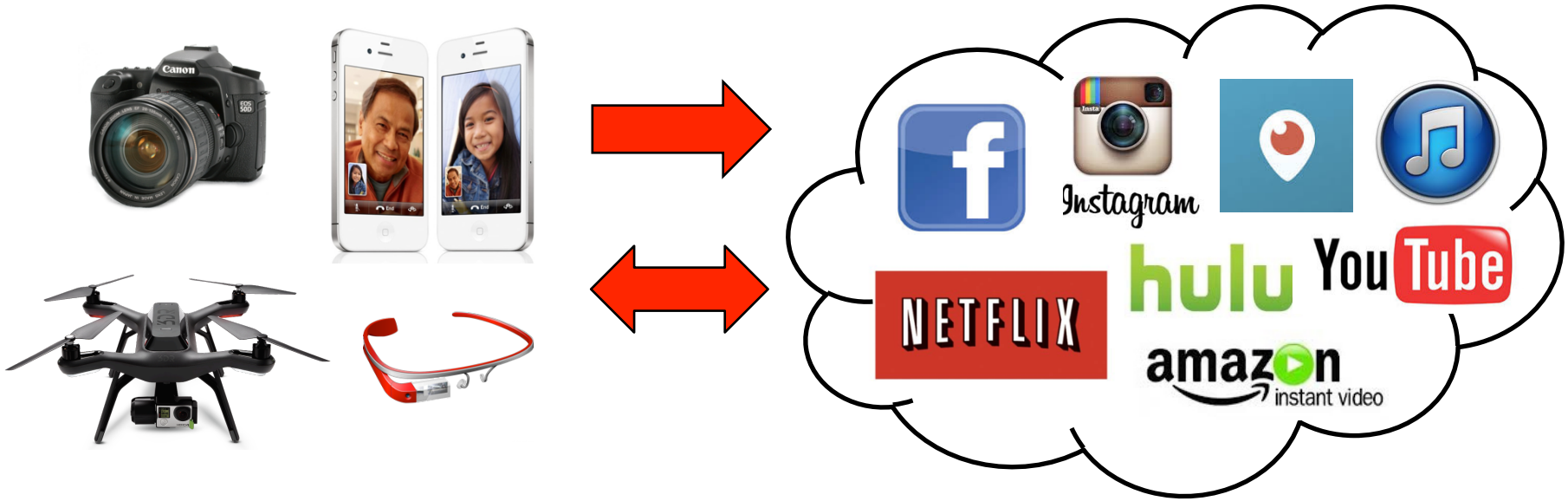

Energy limited due to battery capacity

Power limited due to heat dissipation

Need energy-efficient pixel processing!

Energy-Efficient Pixel Processing

Next-Generation Video Coding (Compress Pixels)

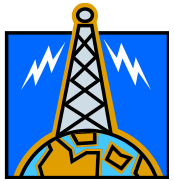

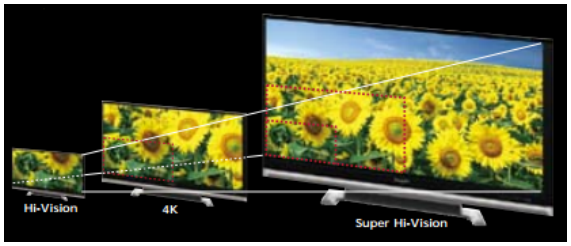

Ultra-HD

Goal: Increase coding efficiency, speed and energy-efficiency

Energy-Efficient Computer Vision & Deep Learning (Understand Pixels)

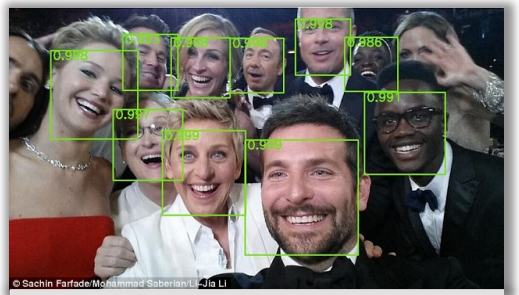

Recognition

Self-Driving Cars

AI

Goal: Make computer vision as ubiquitous as video coding

Typical Constraints on Video Coding

- **Area cost**
  - **Memory Size 100-500kB**
- **Power budget**
  - **< 1W for smartphones**
- **Throughput**
  - **Real-time 30 fps**
- **Energy**
  - **~1nJ/pixel**

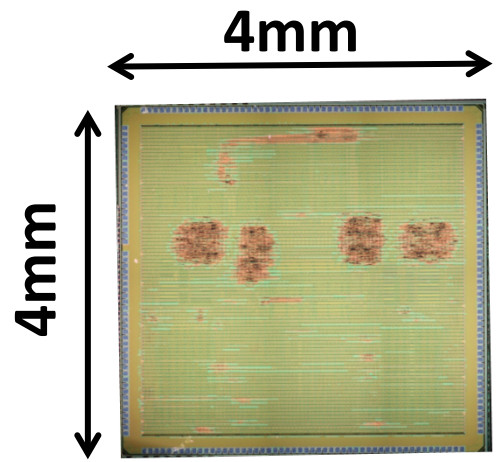

MIT Object Detection Chip [VLSI 2016]

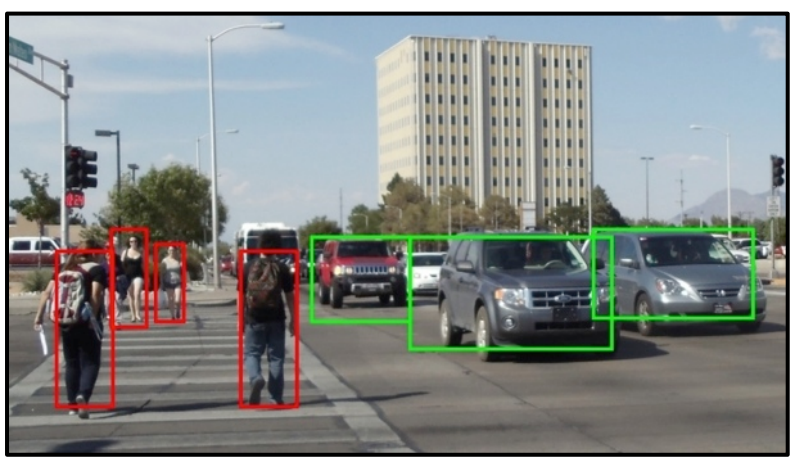

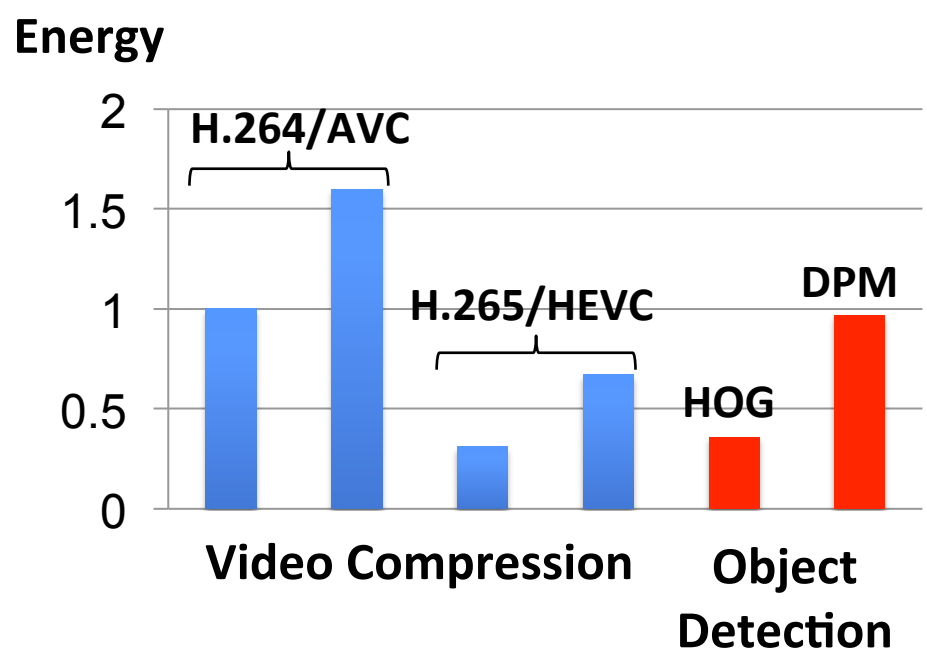

Eyeriss: Energy-Efficient Hardware for DCNNs

Yu-Hsin Chen, Tushar Krishna, Joel Emer, Vivienne Sze, ISSCC 2016 / ISCA 2016




Deep Convolutional Neural Networks

Modern ***deep*** CNN: can be over **100** CONV layers

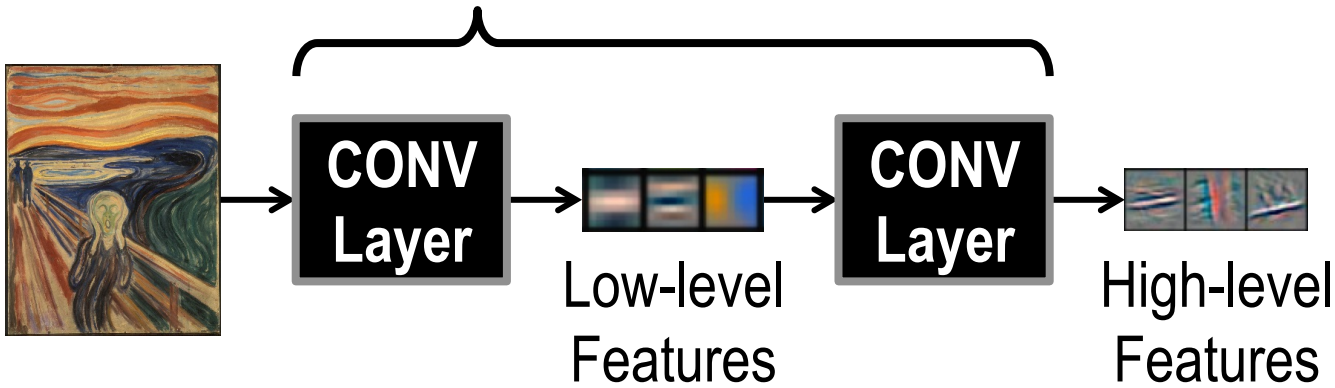

Deep Convolutional Neural Networks

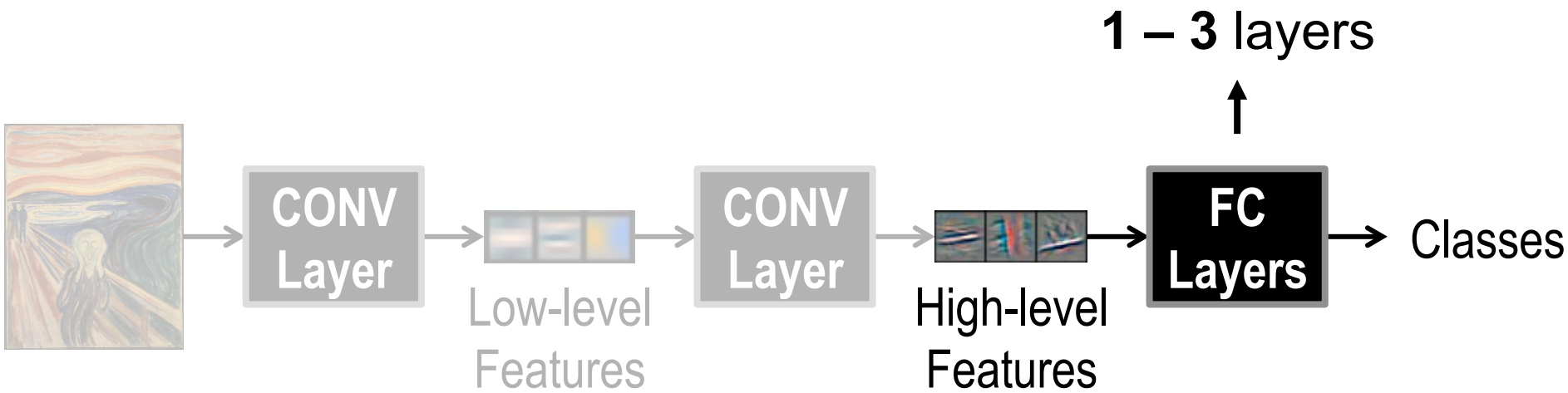

Deep Convolutional Neural Networks

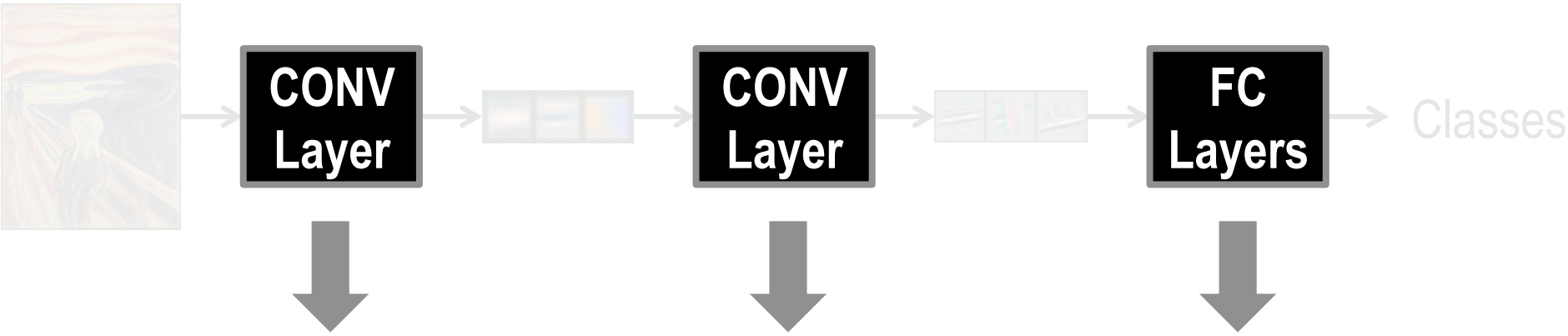

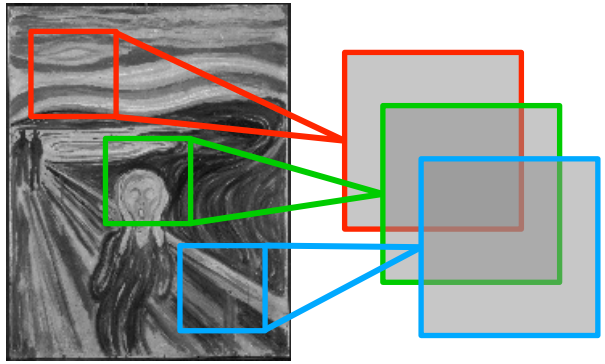

Convolutions account for more than 90% of overall computation, dominating **runtime** and **energy consumption**

High-Dimensional CNN Convolution

Input Image (Feature Map)

Filter

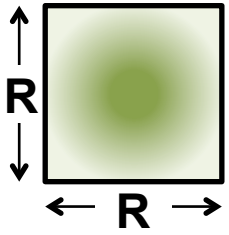

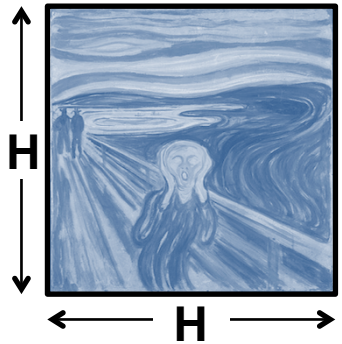

High-Dimensional CNN Convolution

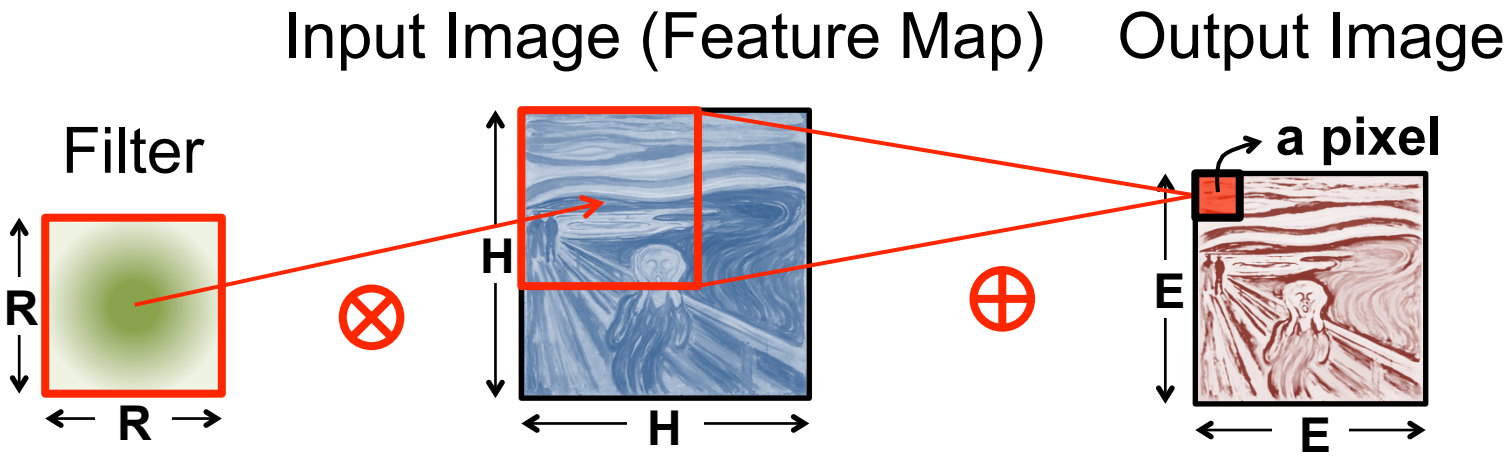

Element-wise Multiplication

Partial Sum (psum) **Accumulation**

High-Dimensional CNN Convolution

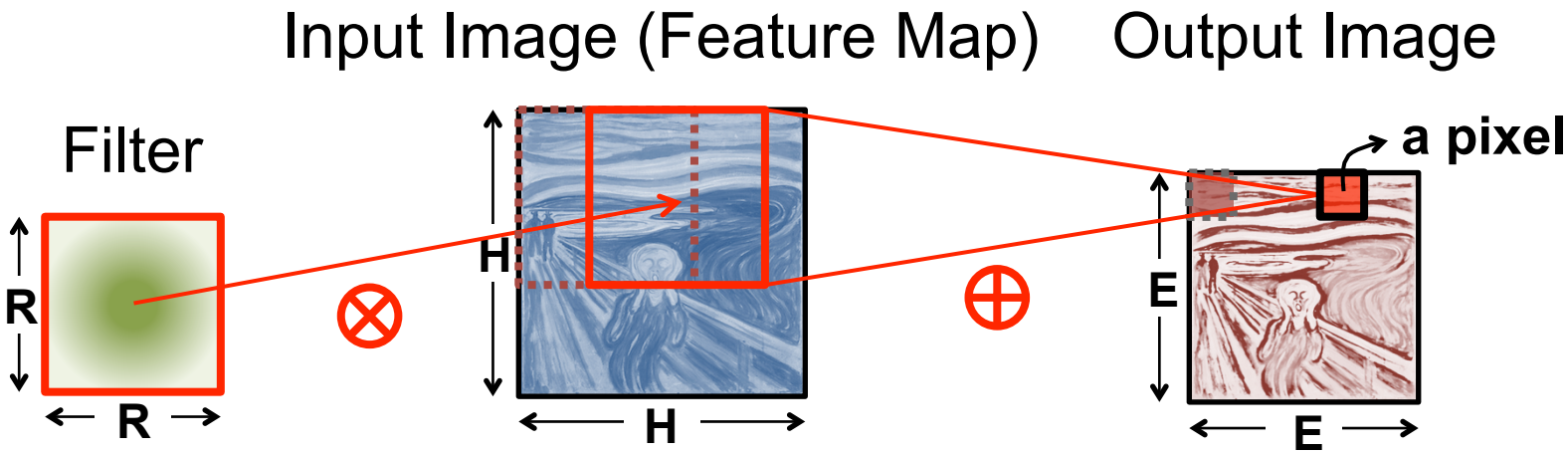

Sliding Window Processing

High-Dimensional CNN Convolution

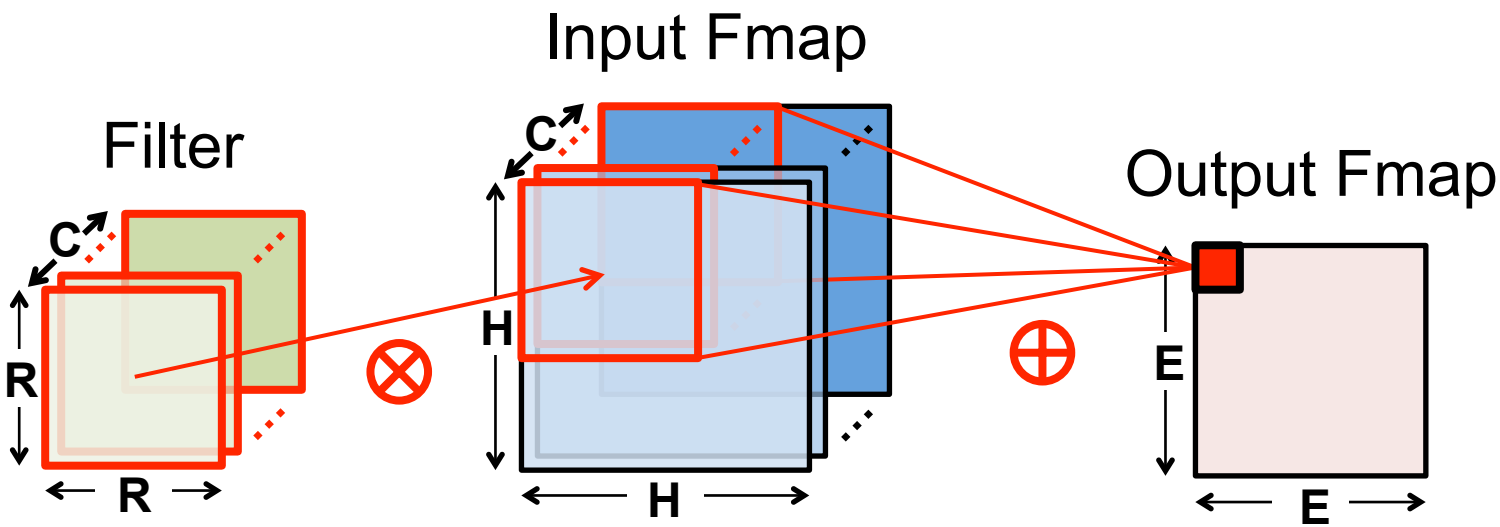

Many Input Channels (C)

AlexNet: 3 – 192 Channels (C)

High-Dimensional CNN Convolution

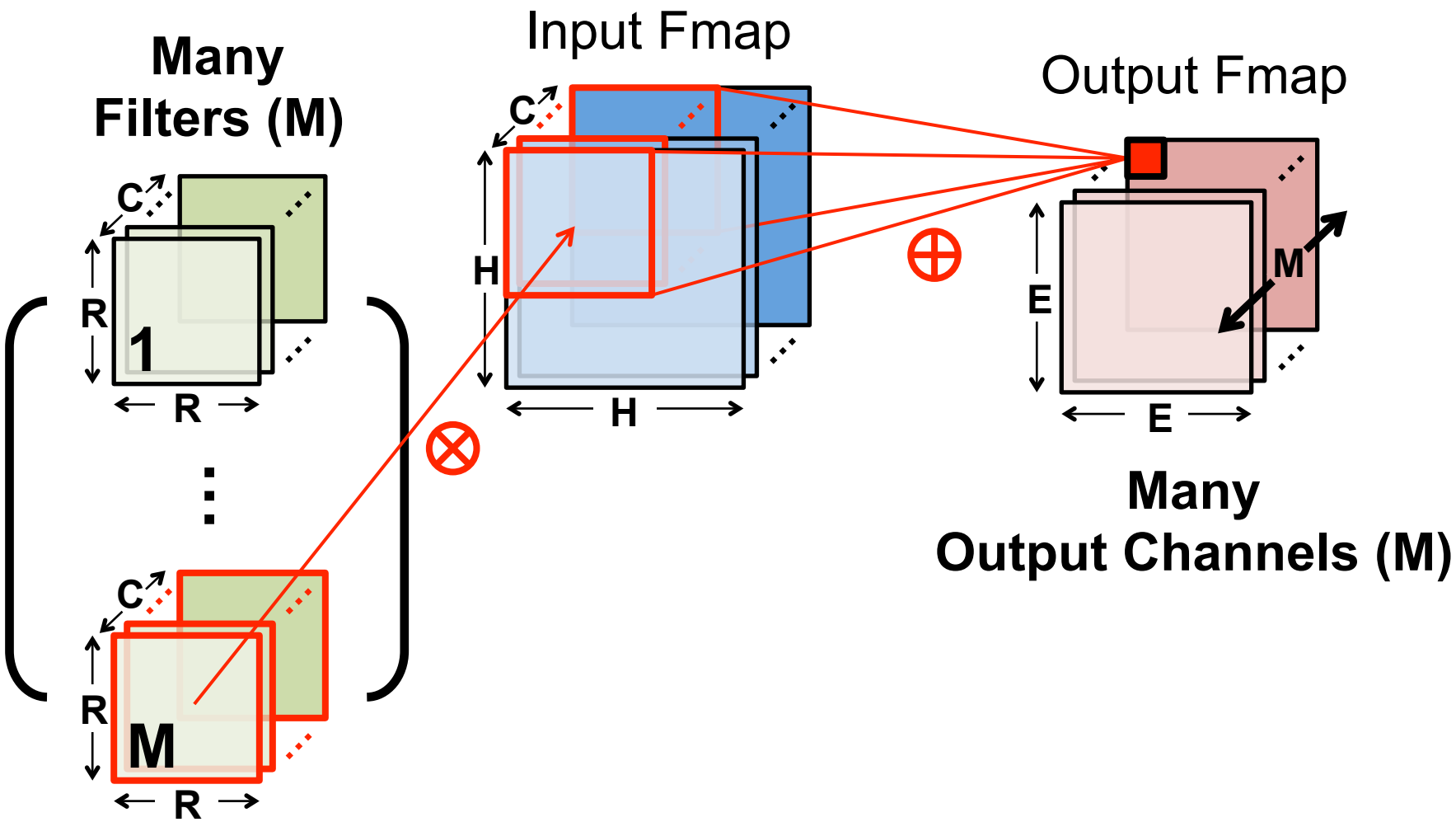

AlexNet: 96 – 384 Filters (M)

High-Dimensional CNN Convolution

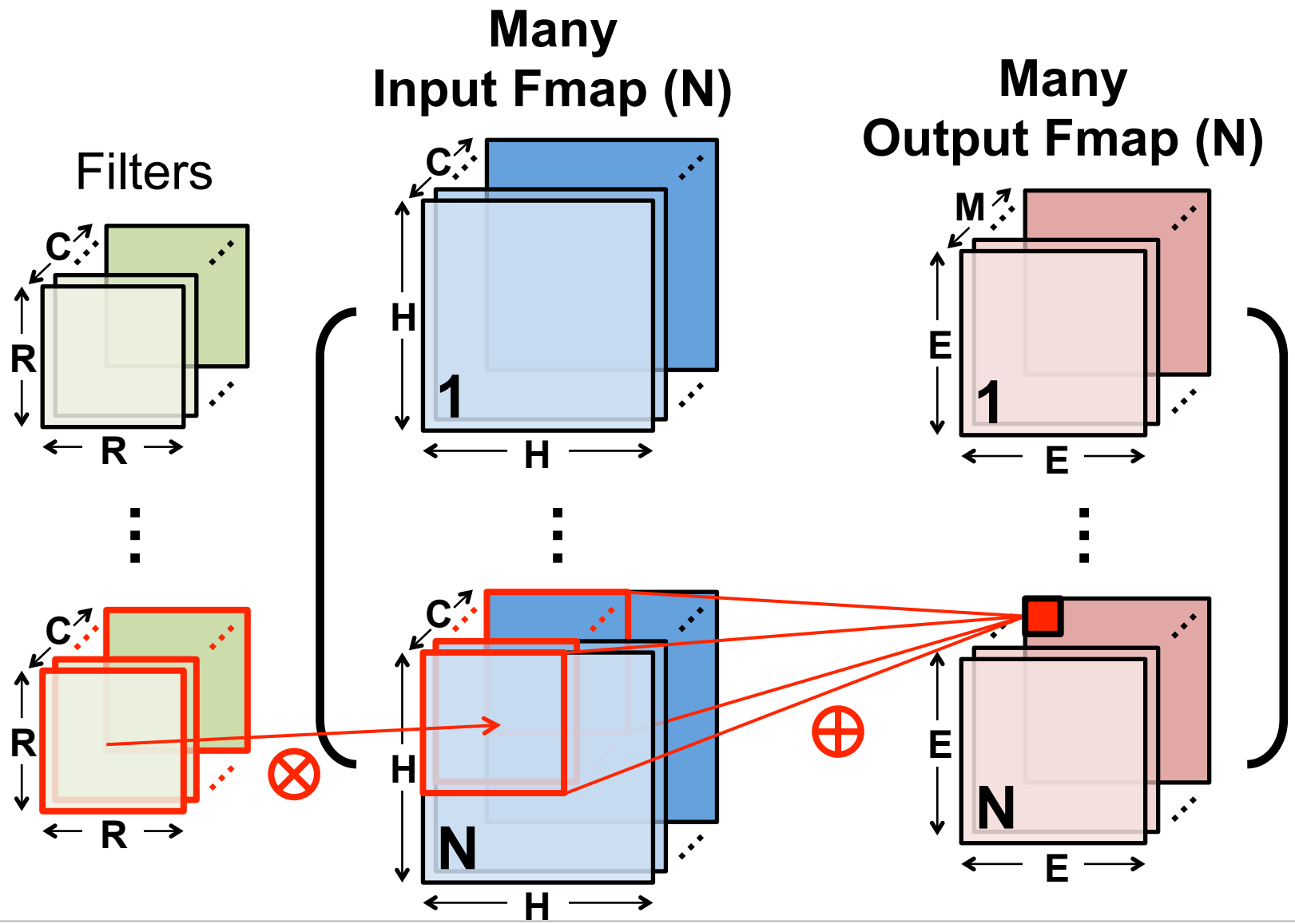

Image batch size: 1 – 256 (N)

Large Sizes with Varying Shapes

AlexNet[1] Convolutional Layer Configurations

Layer	Filter Size (R)	# Filters (M)	# Channels (C)	Stride
1	11x11	96	3	4
2	5x5	256	48	1
3	3x3	384	256	1
4	3x3	384	192	1
5	3x3	256	192	1

Layer 1

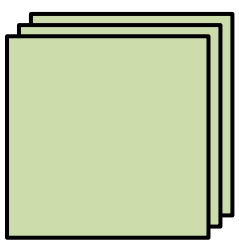

34k Params
105M MACs

Layer 2

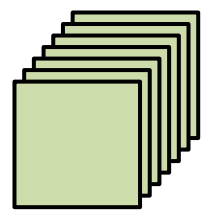

307k Params
224M MACs

Layer 3

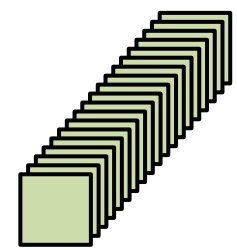

885k Params
150M MACs

1. [Krizhevsky, NIPS 2012]

Properties We Can Leverage

- Operations exhibit **high parallelism**
  → **high throughput** possible

Properties We Can Leverage

- Operations exhibit **high parallelism**
  → **high throughput** possible
- Memory Access is the Bottleneck

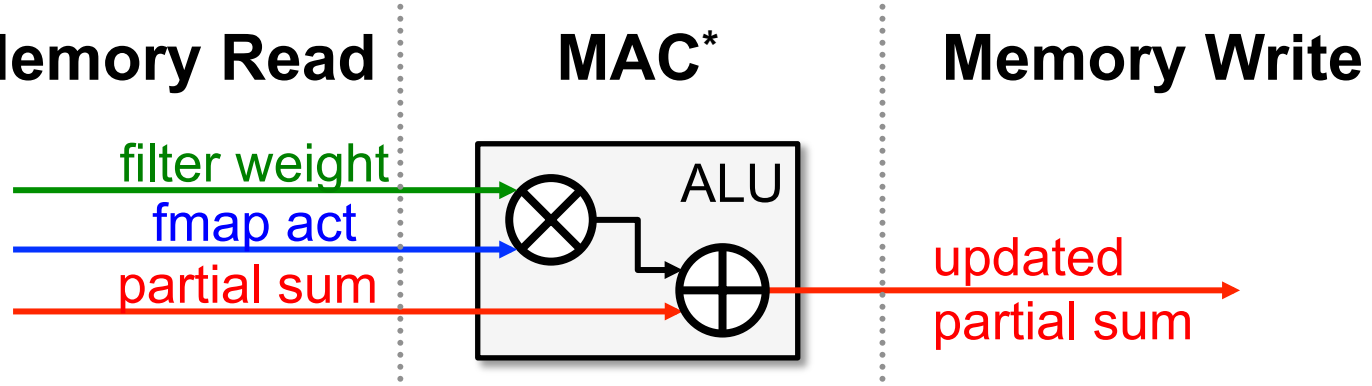

* multiply-and-accumulate

Properties We Can Leverage

- Operations exhibit **high parallelism**
  → **high throughput** possible

- Memory Access is the Bottleneck

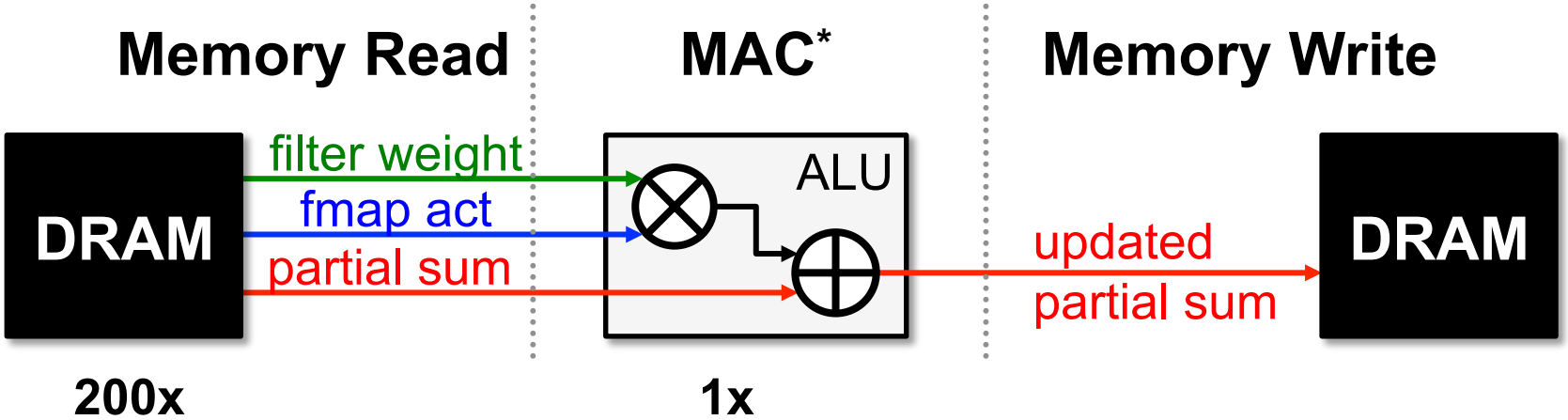

<u>Worst Case</u>: all memory R/W are **DRAM** accesses

- Example: AlexNet [NIPS 2012] has **724M** MACs
  → **2896M** DRAM accesses required

Properties We Can Leverage

- Operations exhibit **high parallelism**
  → **high throughput** possible
- **Input data reuse** opportunities (**up to 500x**)
  → exploit **low-cost memory**

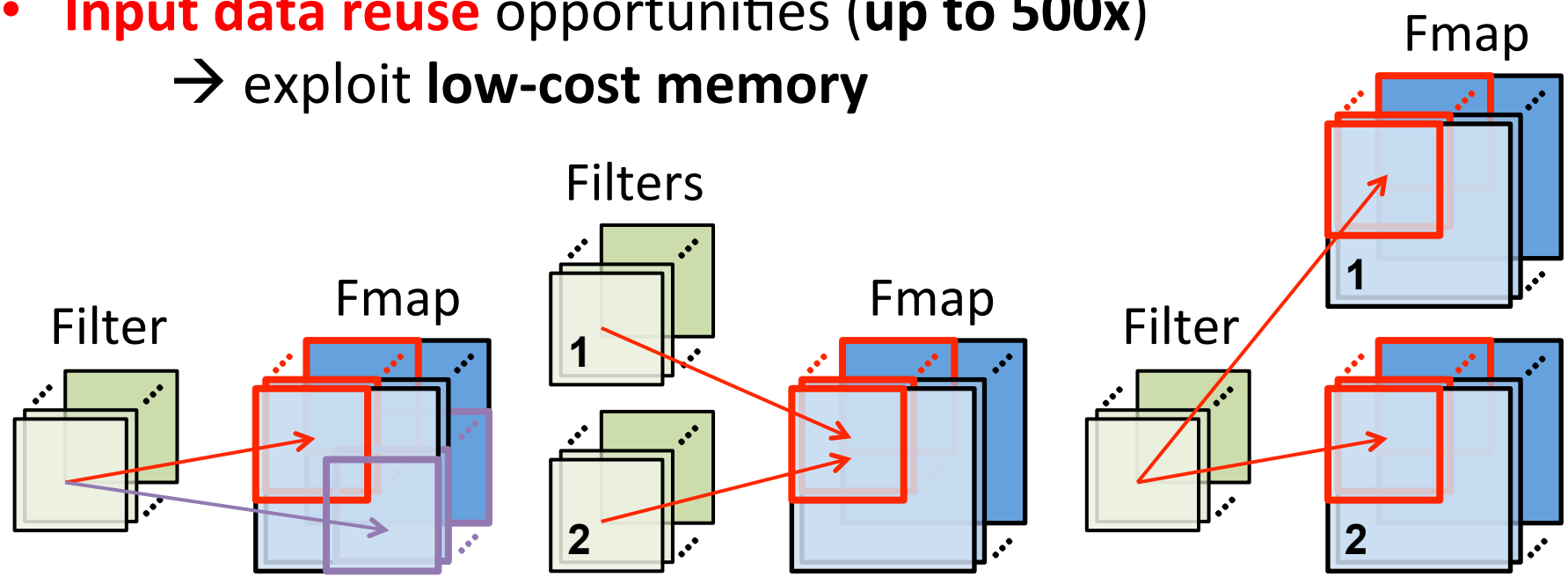

Convolutional Reuse
(activations, weights)

Feature Map Reuse
(activations)

Filter Reuse
(weights)

Highly-Parallel Compute Paradigms

Temporal Architecture (SIMD/SIMT)

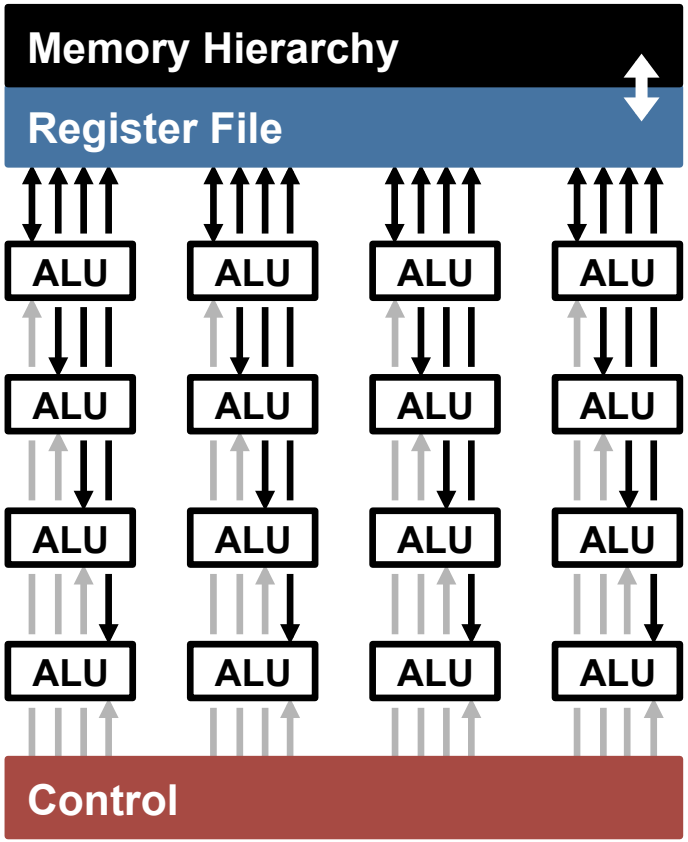

Spatial Architecture (Dataflow Processing)

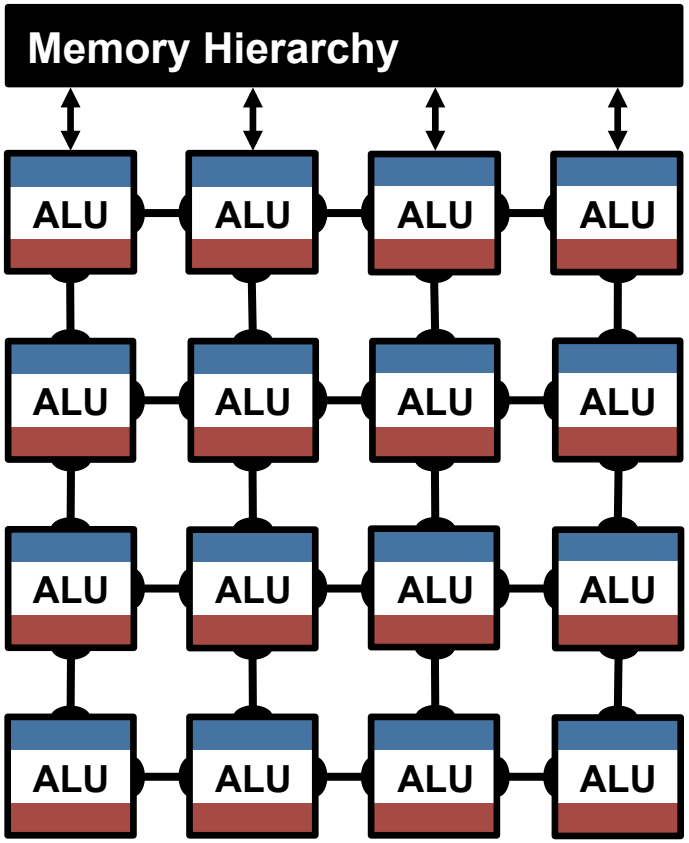

Advantages of Spatial Architecture

Temporal Architecture
(SIMD/SIMT)

Efficient Data Reuse
Distributed local storage (RF)

Inter-PE Communication
Sharing among regions of PEs

Processing Element (PE)

0.5 – 1.0 kB

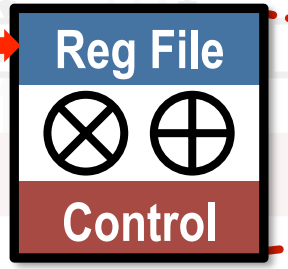

Spatial Architecture (Dataflow Processing)

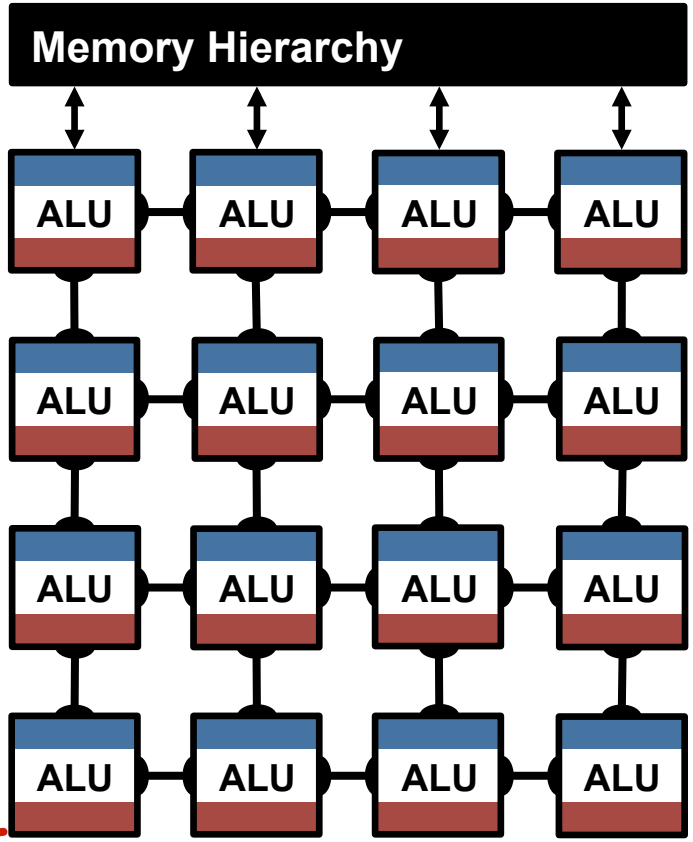

How to Map the Dataflow?

CNN Convolution

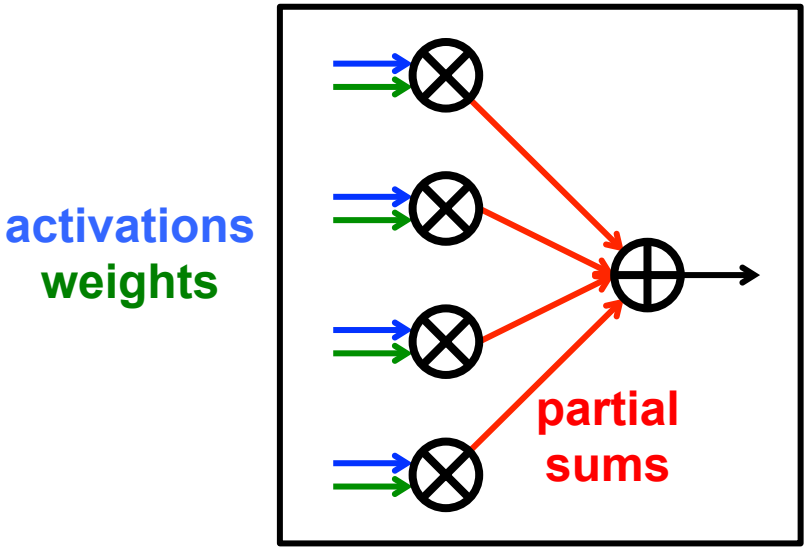

?

Spatial Architecture (Dataflow Processing)

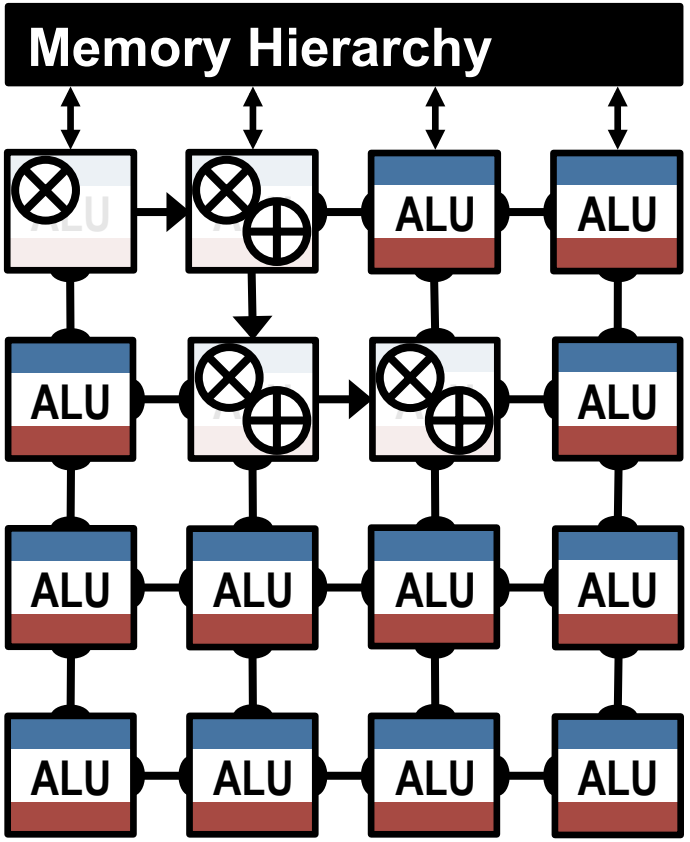

Goal: Increase reuse of input data (**weights** and **activations**) and local **partial sums** accumulation

Energy-Efficient Dataflow

Yu-Hsin Chen, Joel Emer, Vivienne Sze, ISCA 2016

Maximize data reuse and accumulation at RF

Data Movement is Expensive

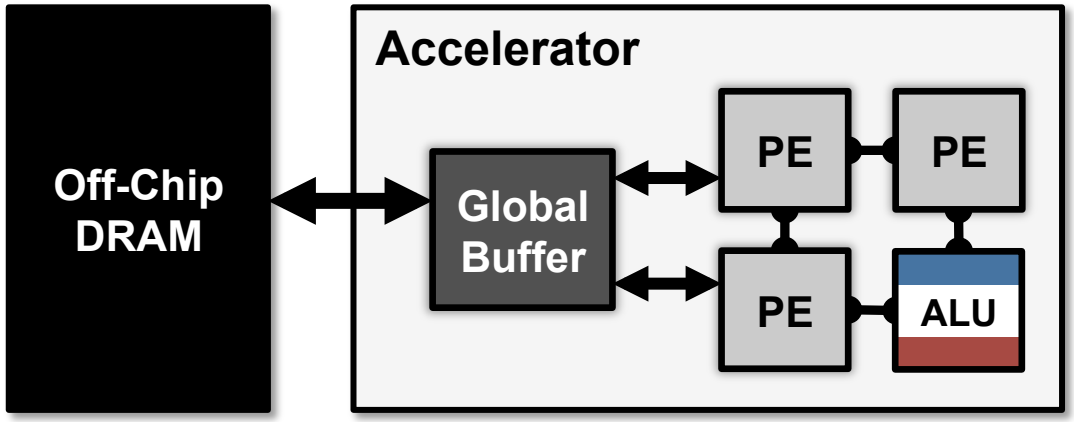

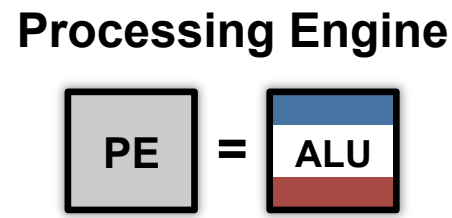

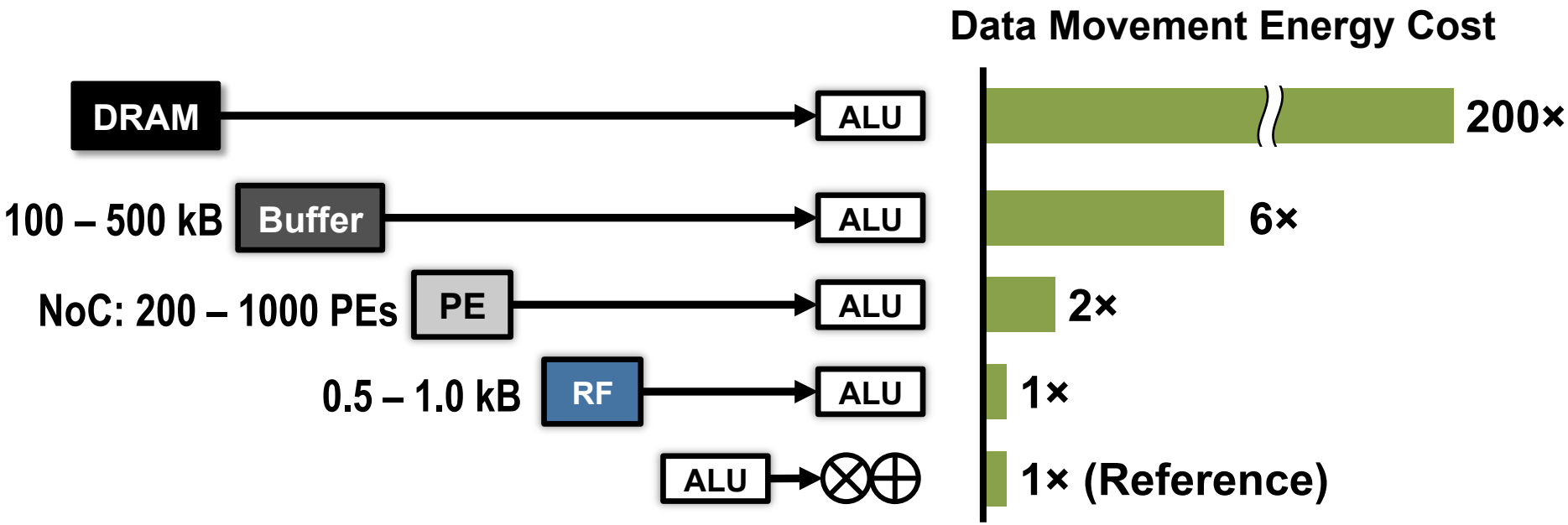

Maximize data reuse at lower levels of hierarchy

Weight Stationary (WS)

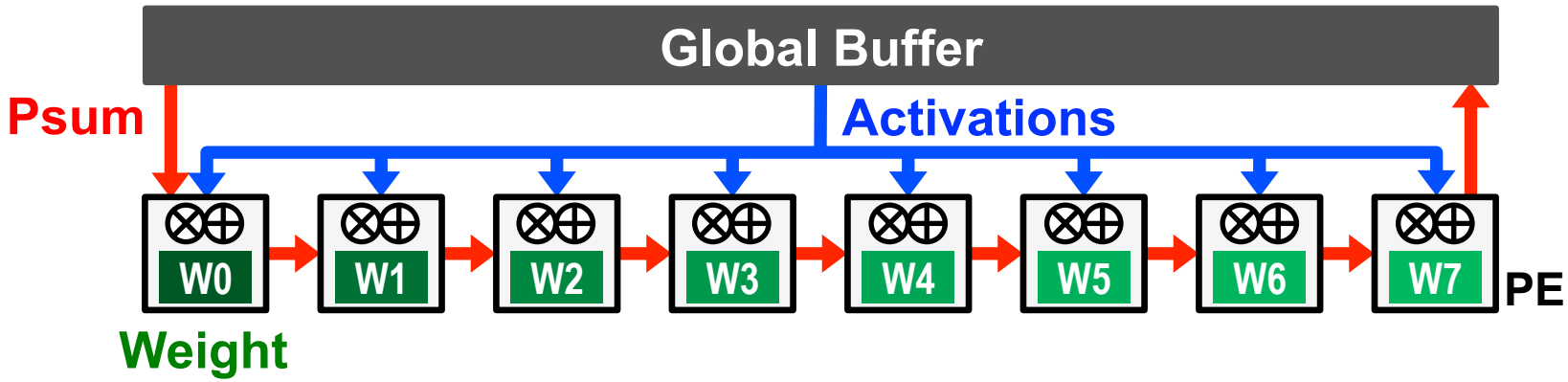

- **Minimize weight** read energy consumption
  - maximize convolutional and filter reuse of weights
- **Examples:**

[**Chakradhar**, *ISCA* 2010] [**nn-X (NeuFlow)**, *CVPRW* 2014]

[**Park**, *ISSCC* 2015] [**Origami**, *GLSVLSI* 2015]

Output Stationary (OS)

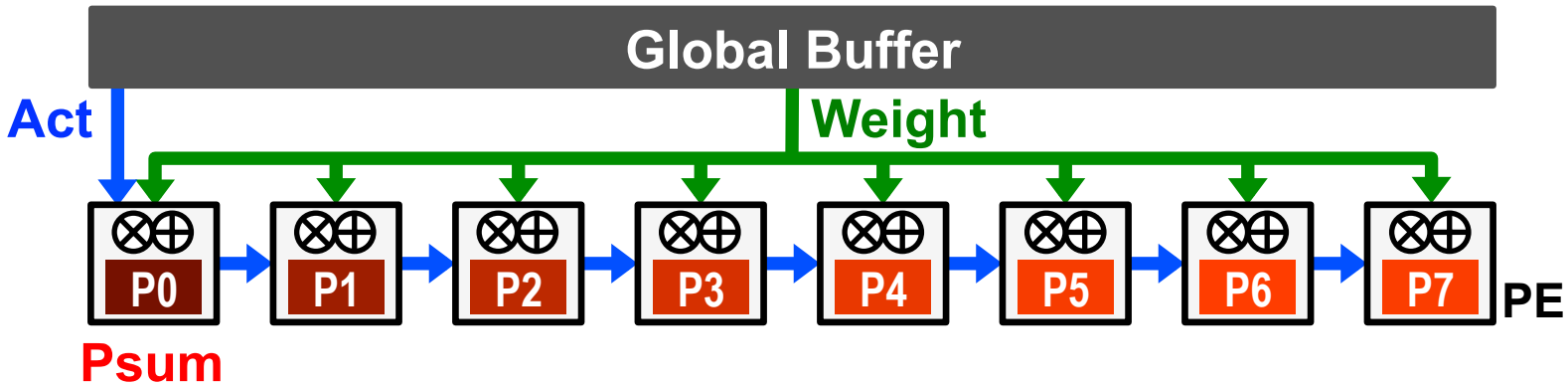

- **Minimize partial sum** R/W energy consumption
  - maximize local accumulation
- **Examples:**

  [**Gupta**, *ICML* 2015] [**ShiDianNao**, *ISCA* 2015]

  [**Peemen**, *ICCD* 2013]

No Local Reuse (NLR)

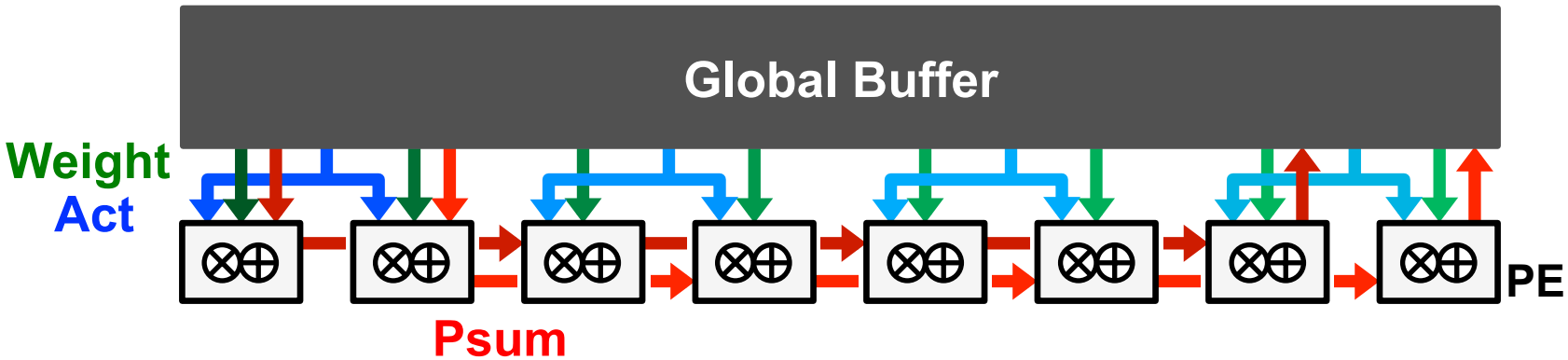

- Use a **large global buffer** as shared storage
  - Reduce **DRAM** access energy consumption
- **Examples:**

  [**DianNao**, *ASPLOS* 2014] [**DaDianNao**, *MICRO* 2014]

  [**Zhang**, *FPGA* 2015]

Row Stationary: Energy-efficient Dataflow

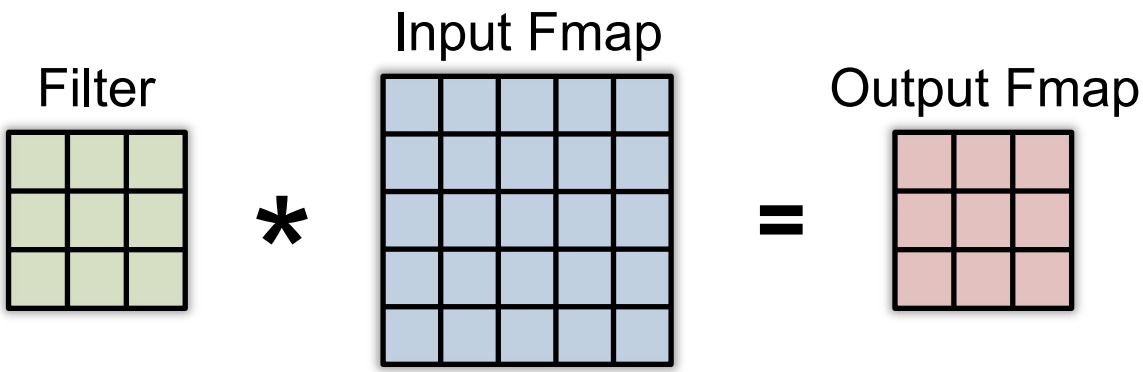

1D Row Convolution in PE

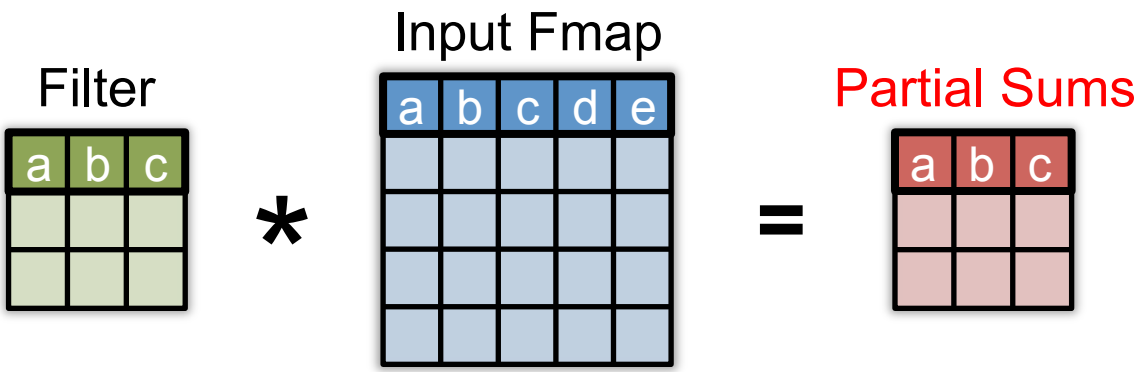

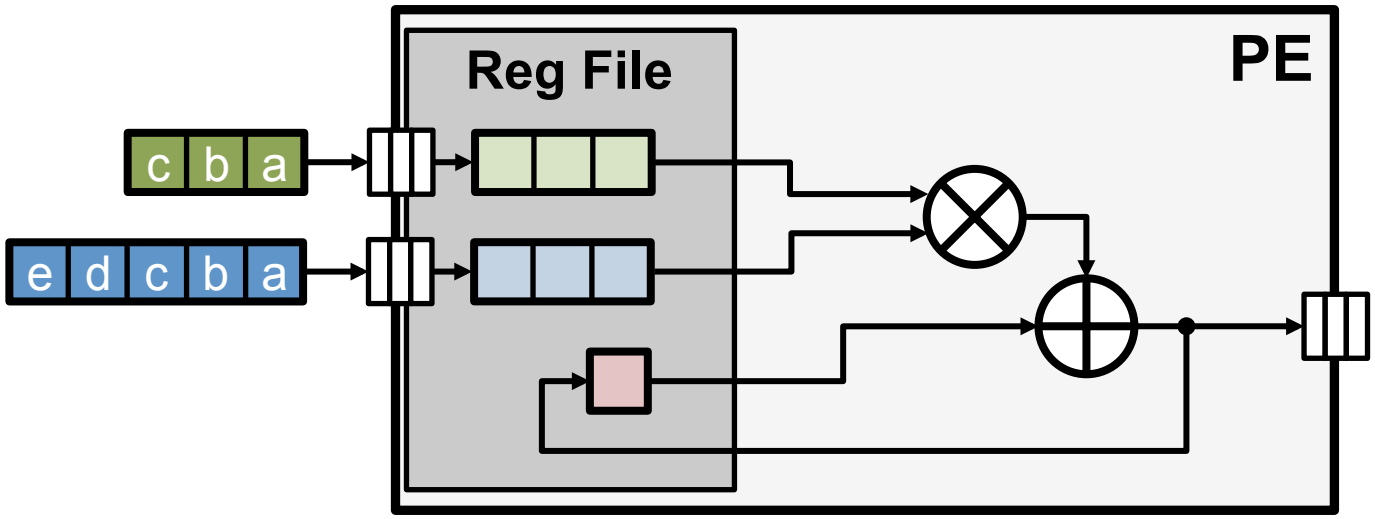

1D Row Convolution in PE

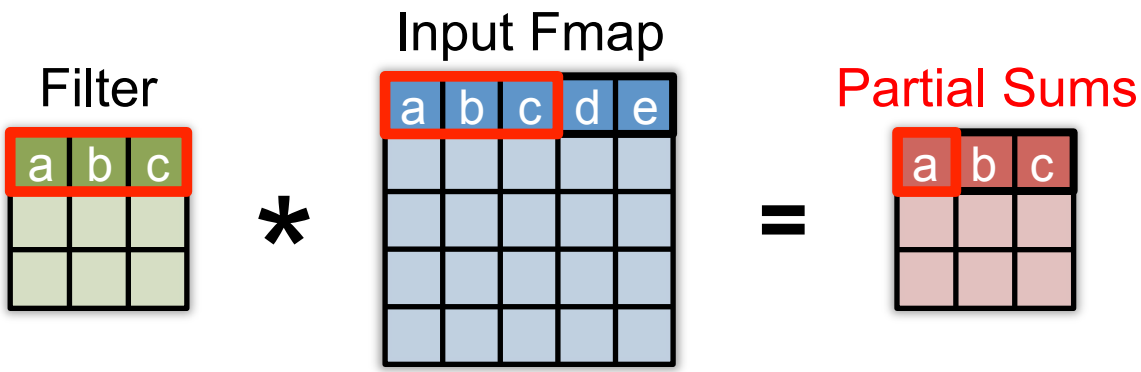

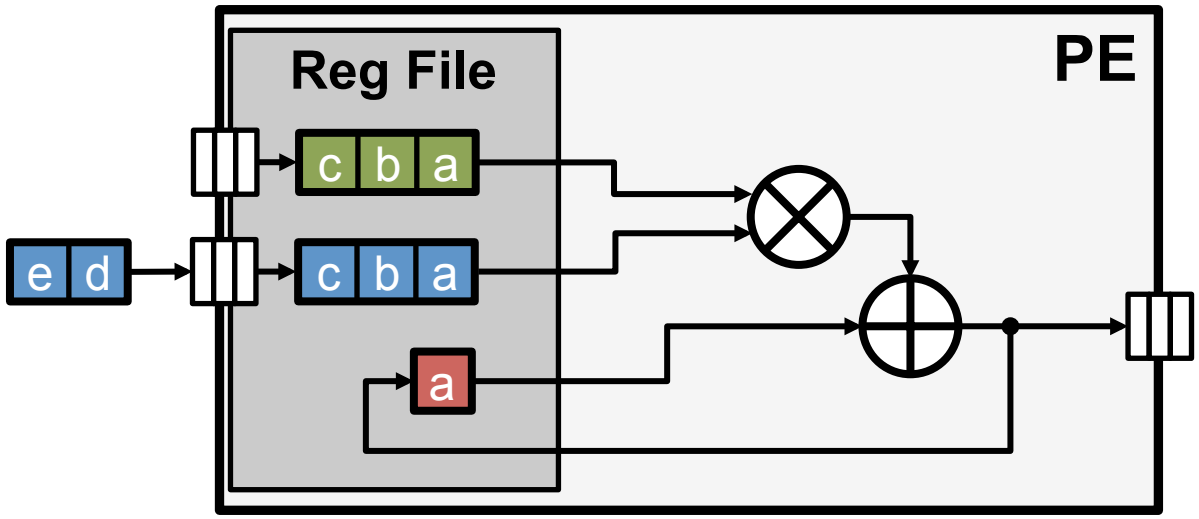

1D Row Convolution in PE

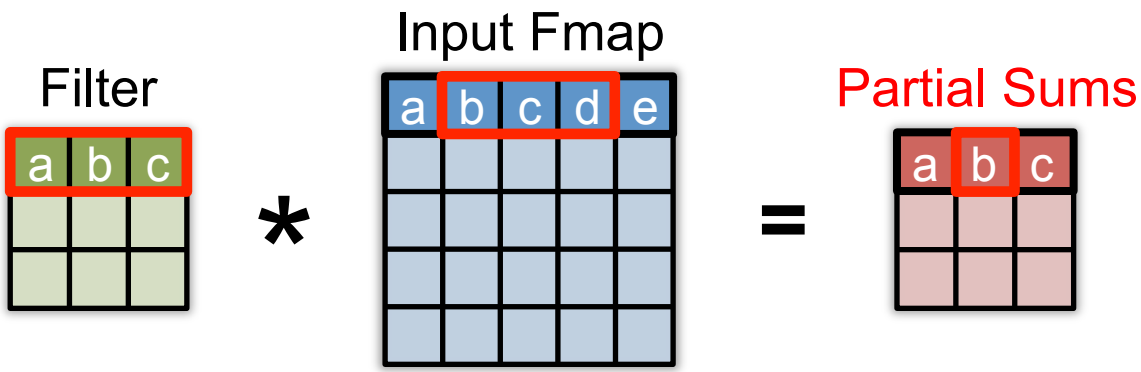

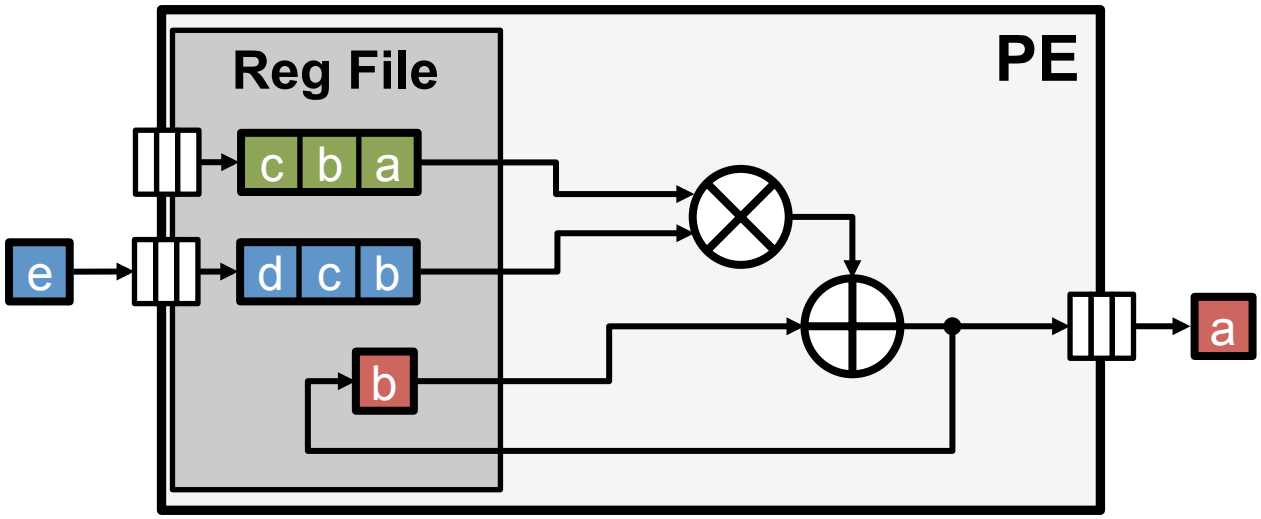

1D Row Convolution in PE

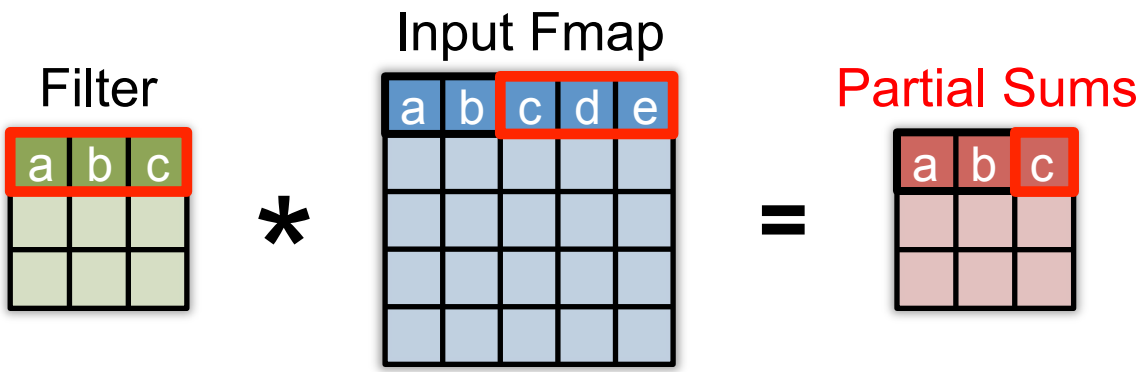

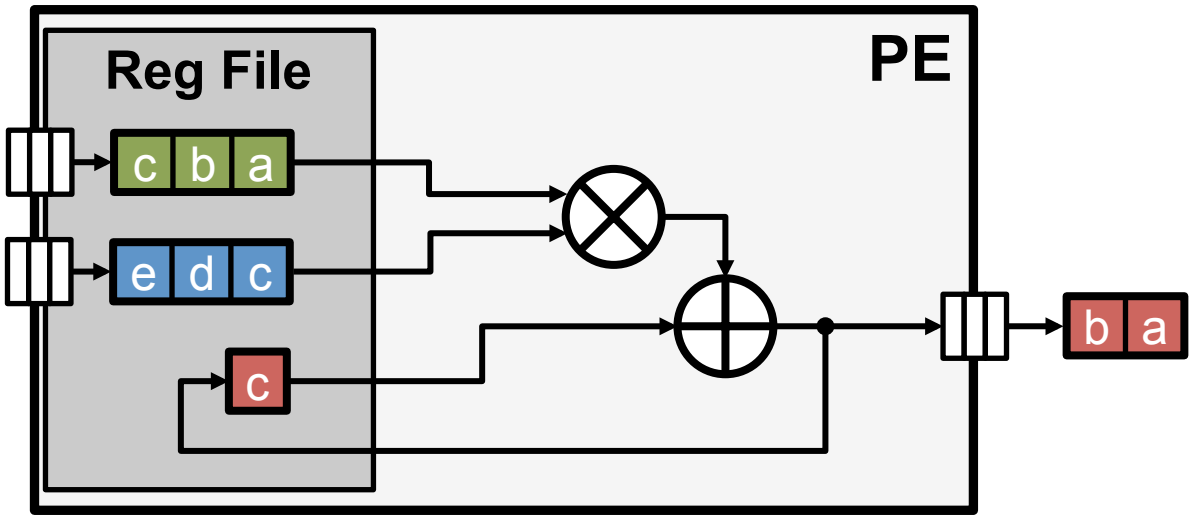

1D Row Convolution in PE

- Maximize row **convolutional reuse** in RF
  - Keep a **filter** row and **fmap** sliding window in RF
- Maximize row **psum accumulation** in RF

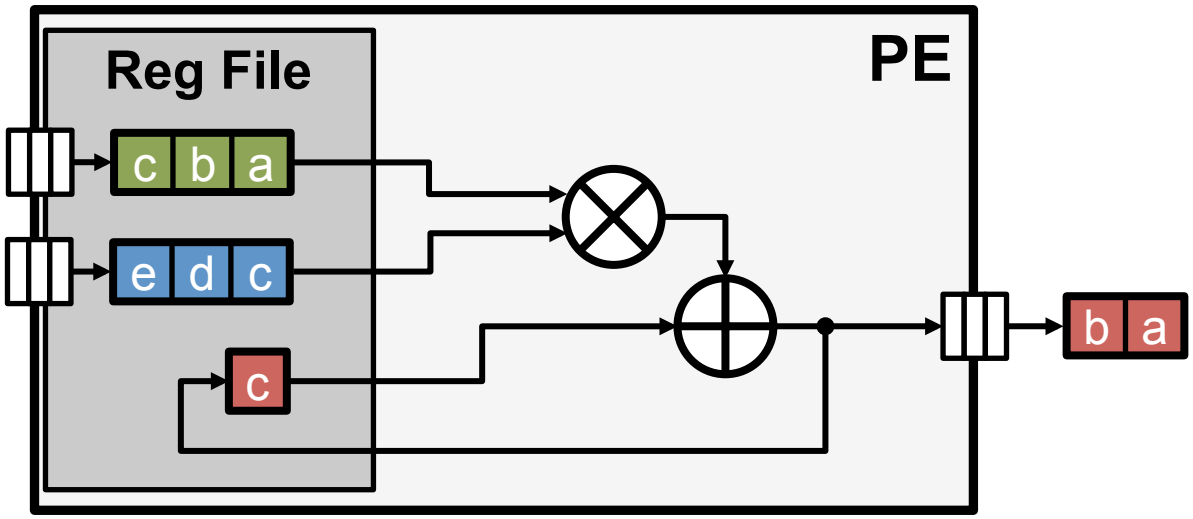

2D Convolution in PE Array

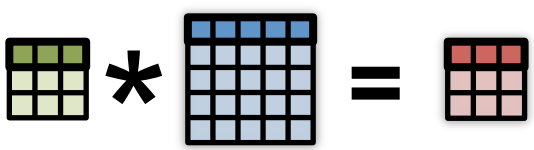

2D Convolution in PE Array

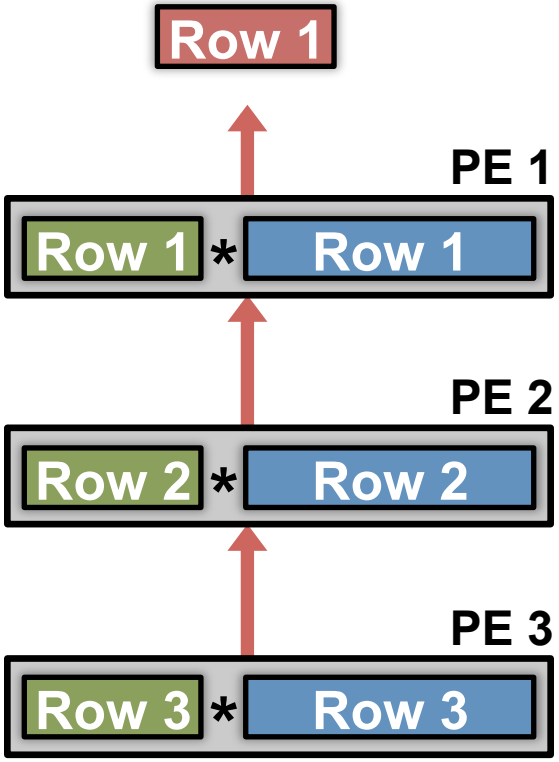

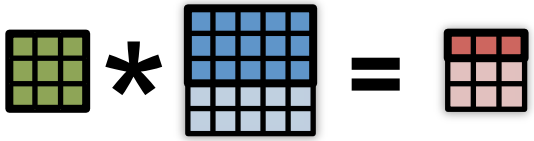

2D Convolution in PE Array

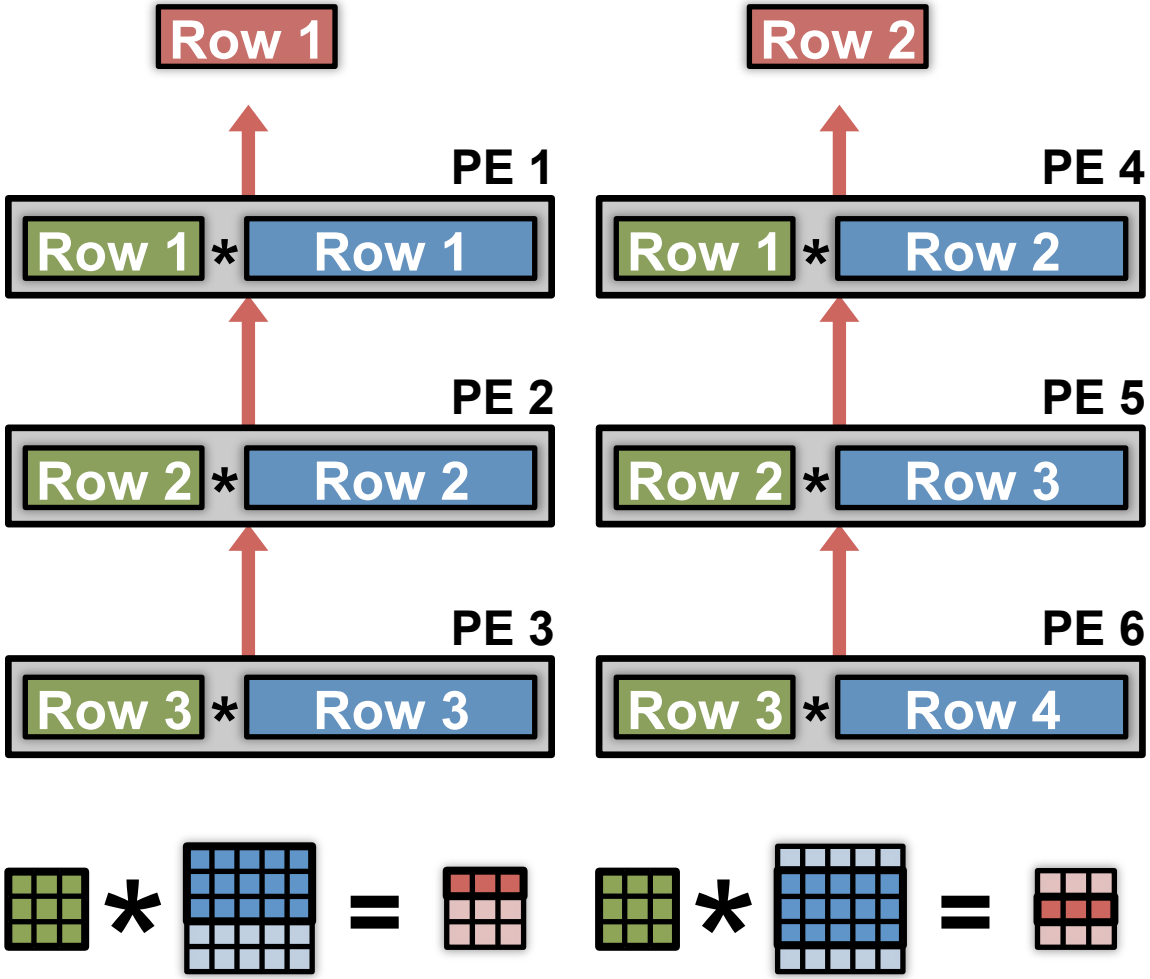

2D Convolution in PE Array

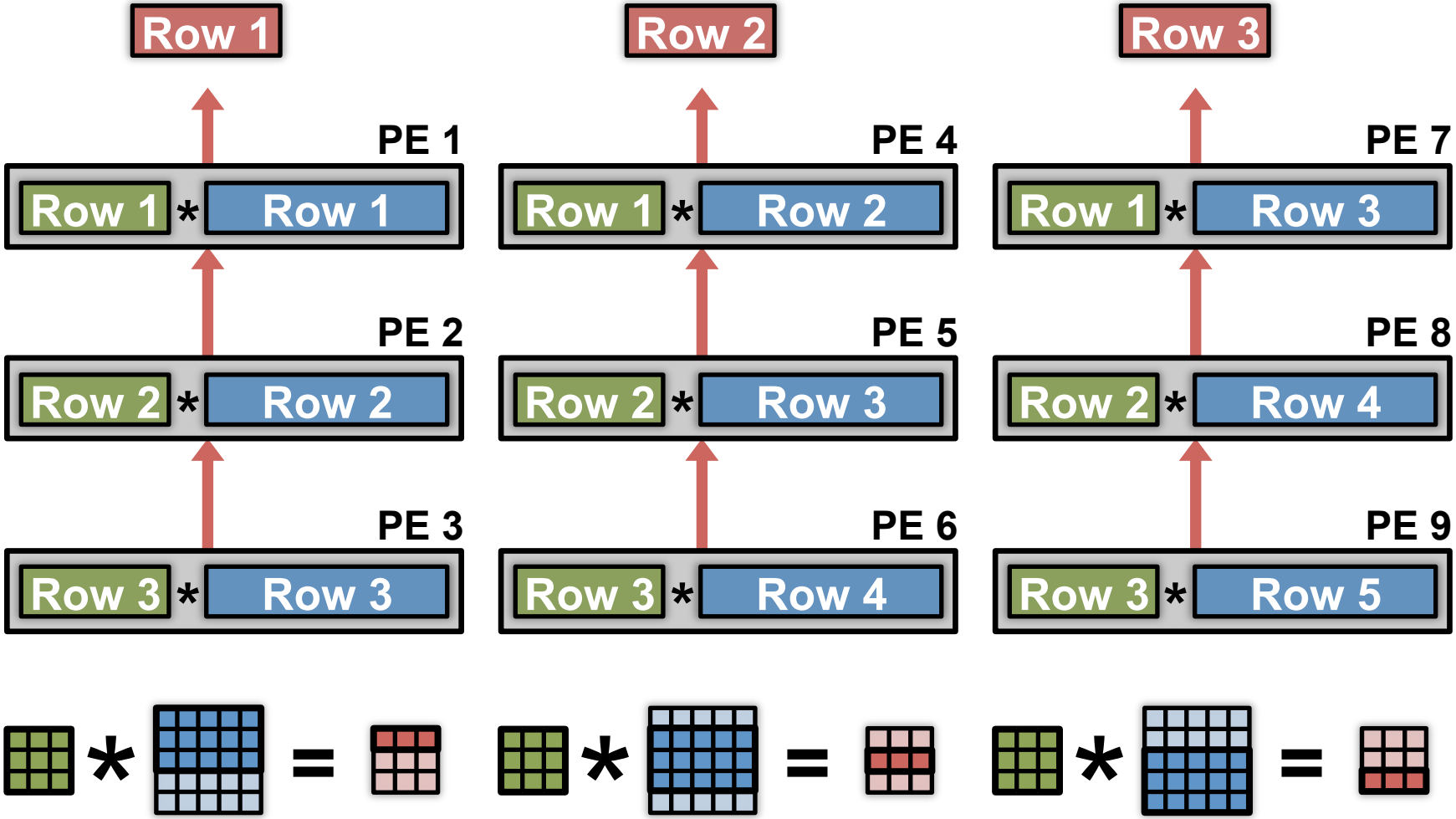

Convolutional Reuse Maximized

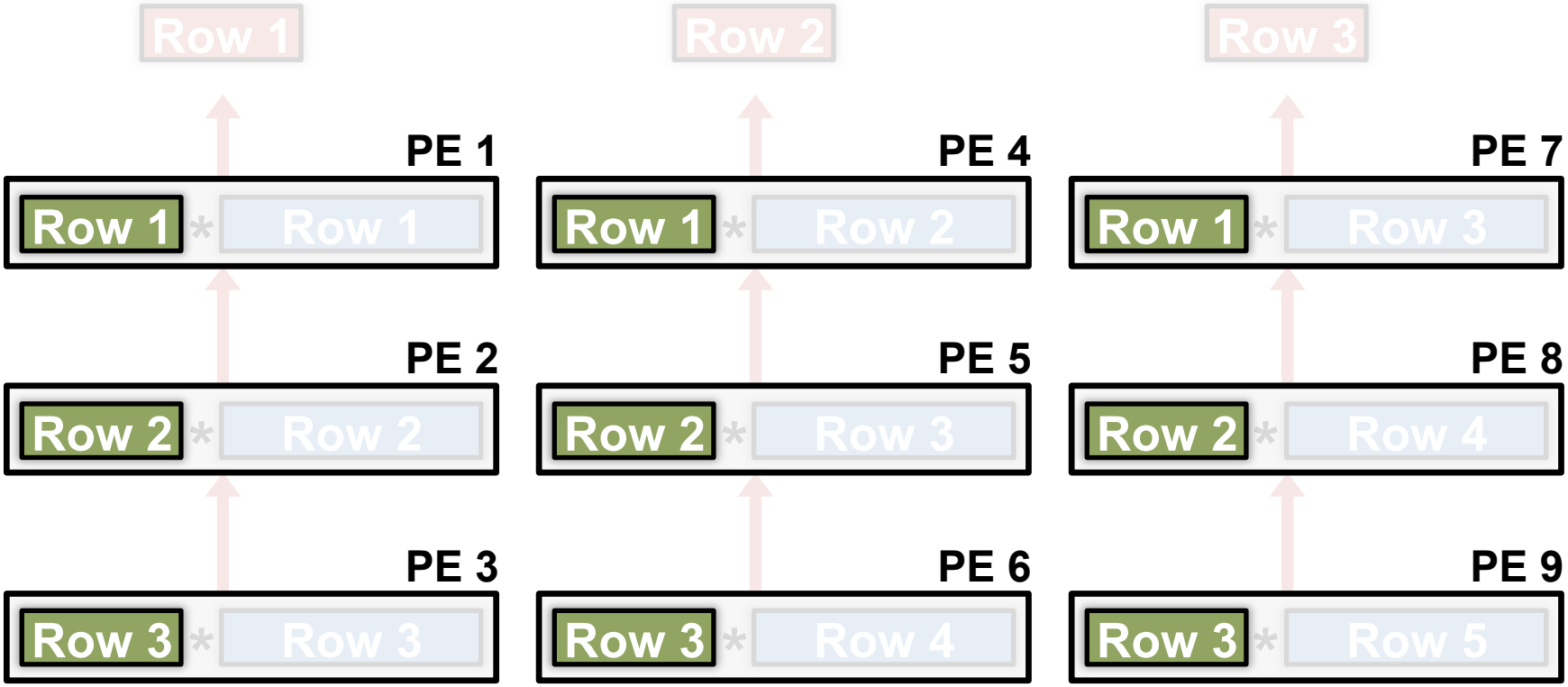

Filter rows are reused across PEs **horizontally**

Convolutional Reuse Maximized

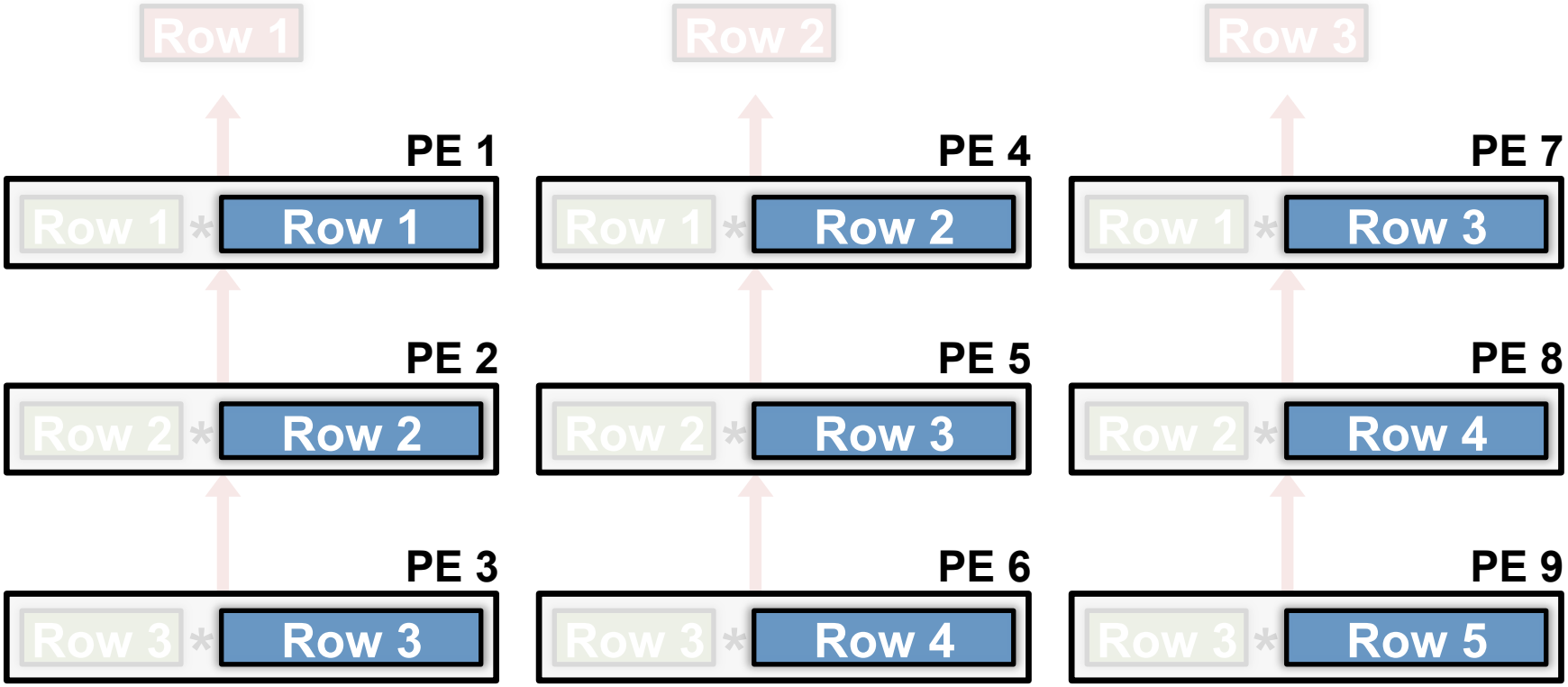

Feature map rows are reused across PEs **diagonally**

Maximize 2D Accumulation in PE Array

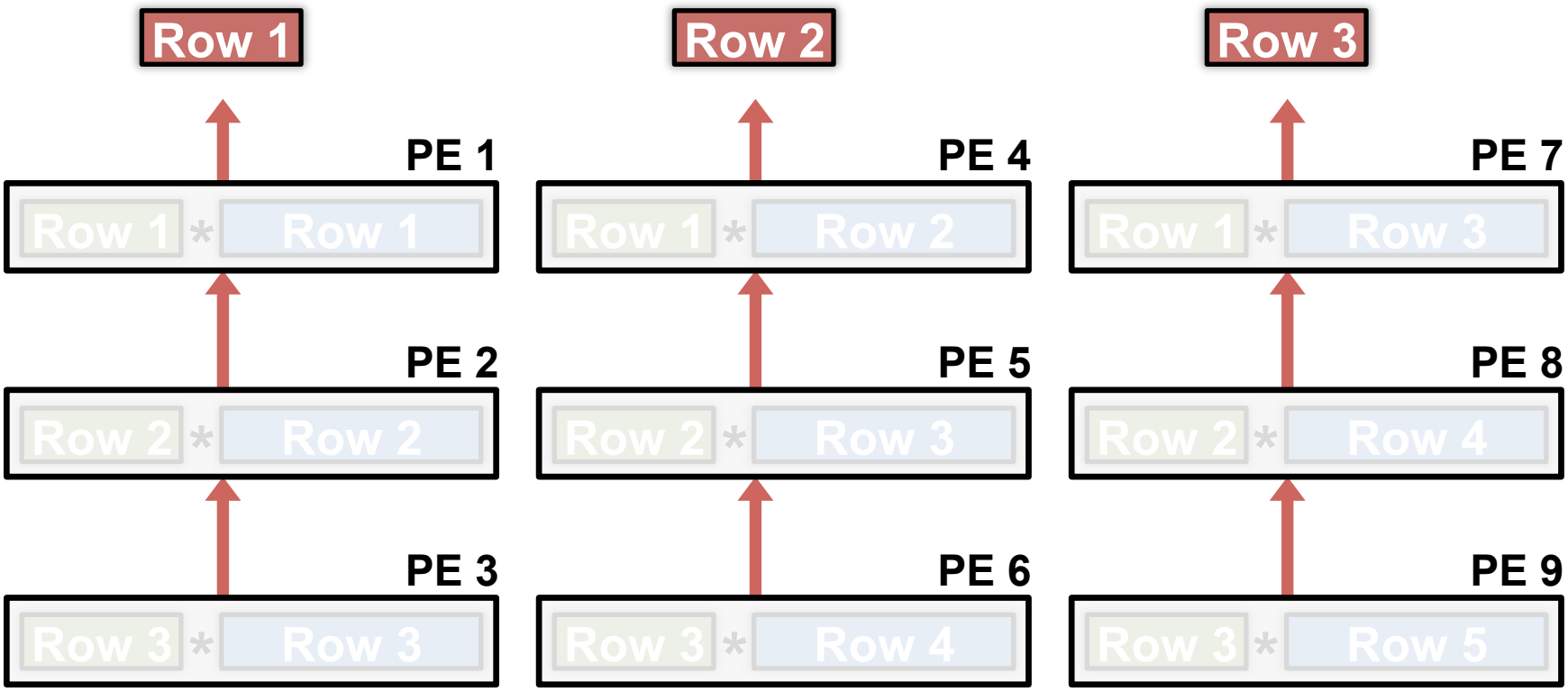

Partial sums accumulate across PEs **vertically**

CNN Convolution – The Full Picture

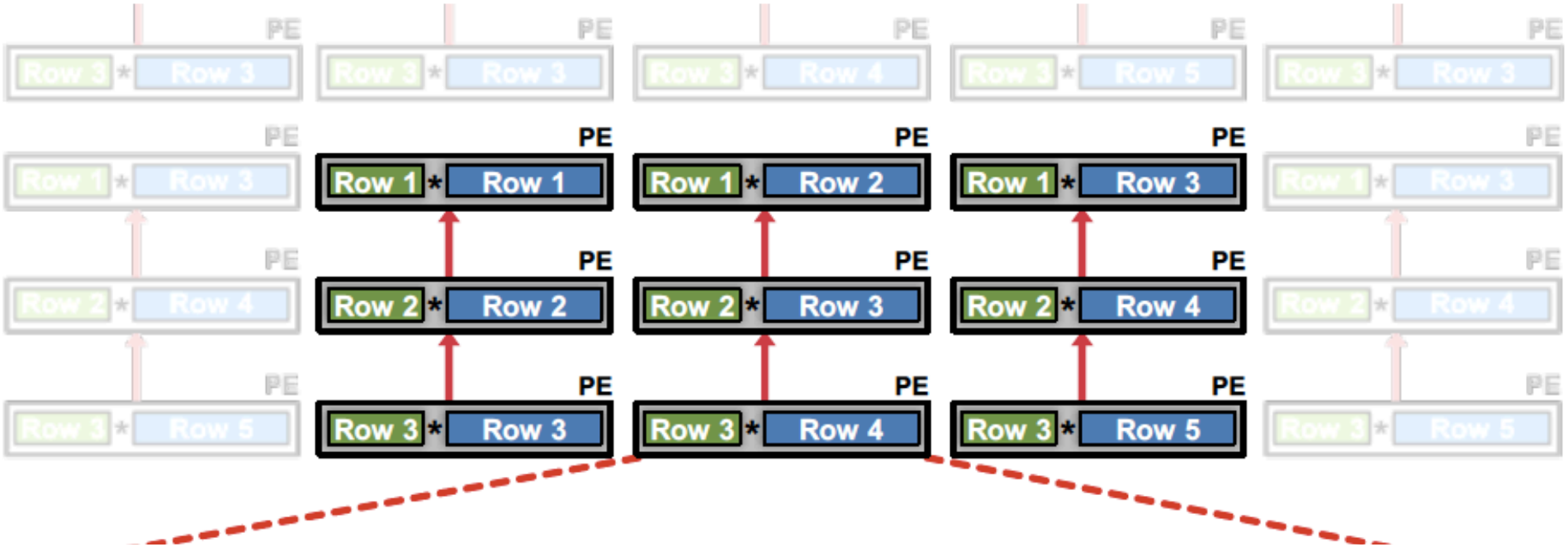

Multiple **fmaps**:

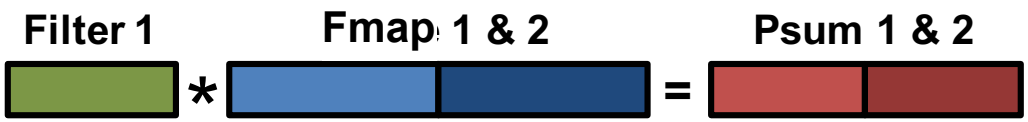

Multiple **filters**:

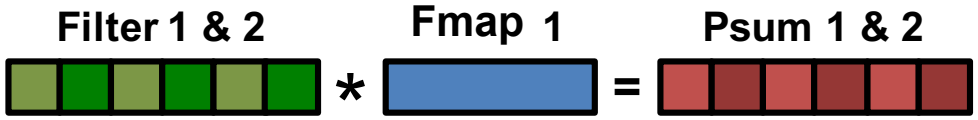

Multiple **channels**:

Map rows from **multiple fmaps**, **filters** and **channels** to same PE to exploit other forms of reuse and local accumulation

Evaluate Reuse in Different Dataflows

- **Weight Stationary**
  - Minimize movement of filter weights
- **Output Stationary**
  - Minimize movement of partial sums
- **No Local Reuse**
  - Don't use any local PE storage. Maximize global buffer size.
- **Row Stationary**

Evaluate Reuse in Different Dataflows

- **Weight Stationary**
  - Minimize movement of filter weights
- **Output Stationary**
  - Minimize movement of partial sums
- **No Local Reuse**
  - Don't use any local PE storage. Maximize global buffer size.
- **Row Stationary**

Evaluation Setup

- Same Total Area
- AlexNet
- 256 PEs
- Batch size = 16

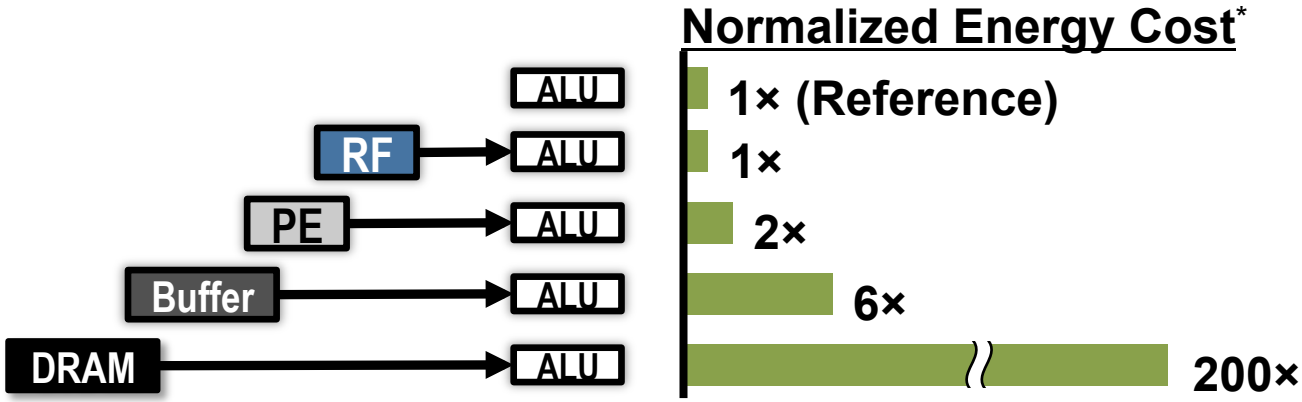

Dataflow Comparison: CONV Layers

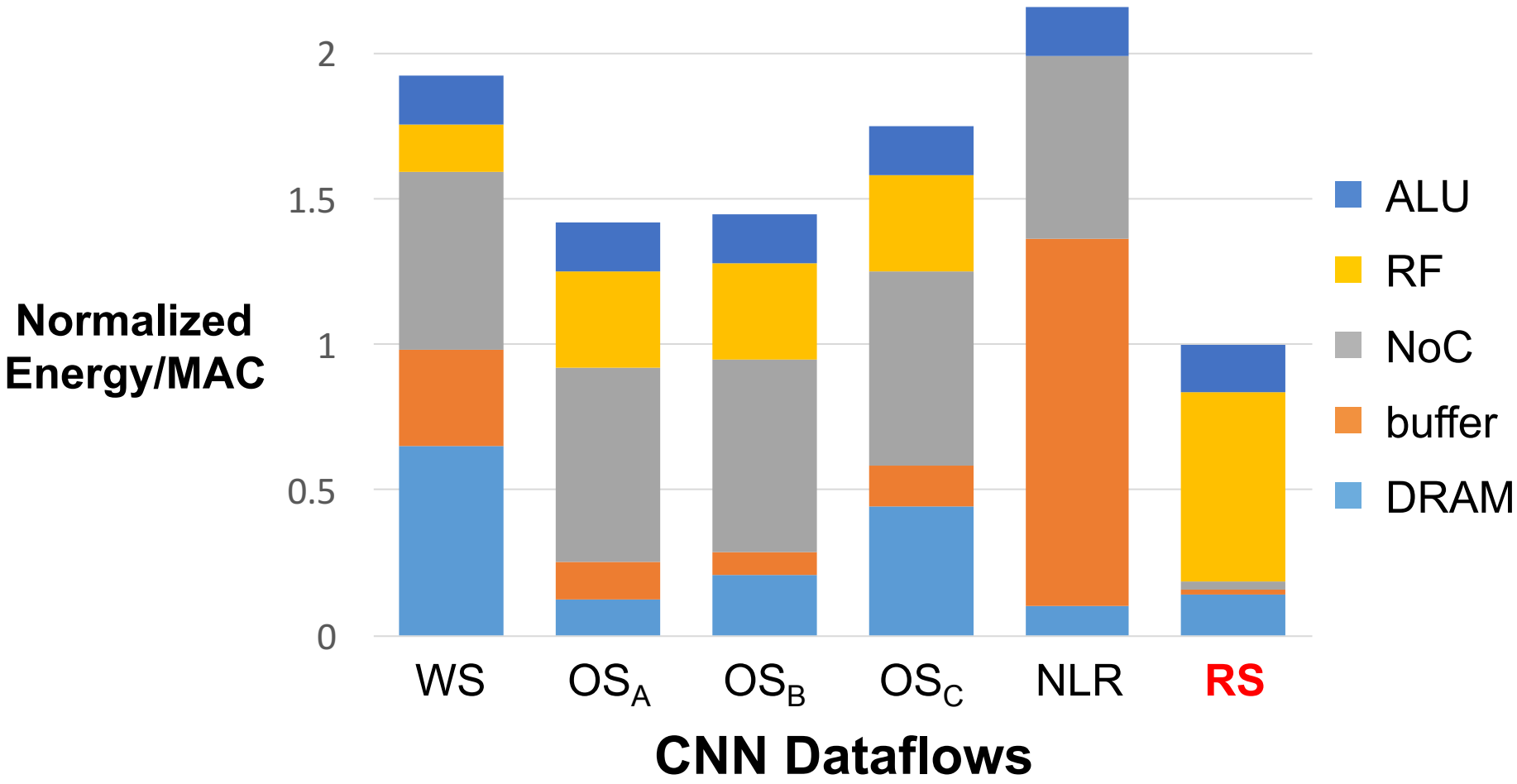

RS uses **1.4× – 2.5× lower** energy than other dataflows

Dataflow Comparison: CONV Layers

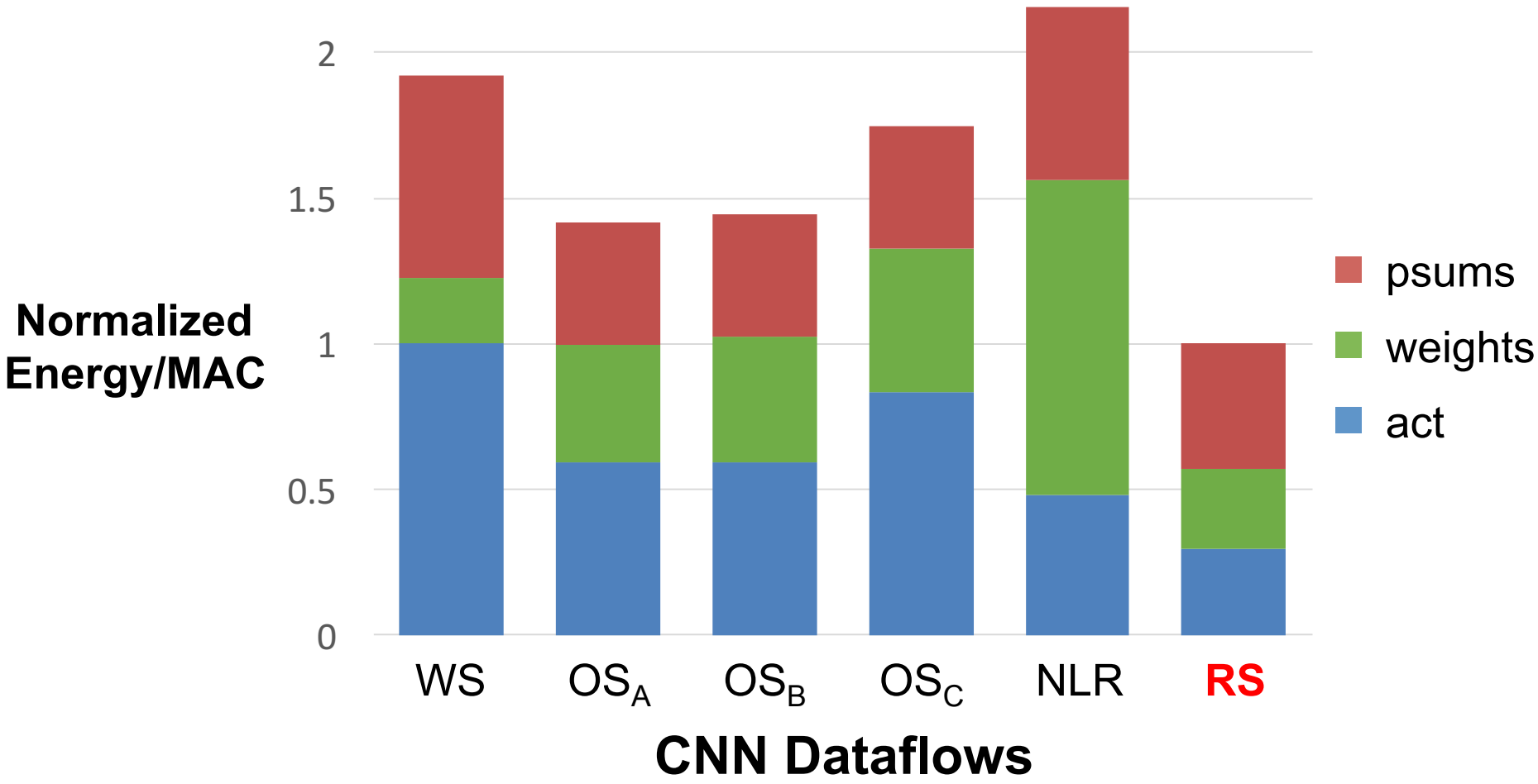

RS optimizes for the best **overall** energy efficiency

Dataflow Comparison: FC Layers

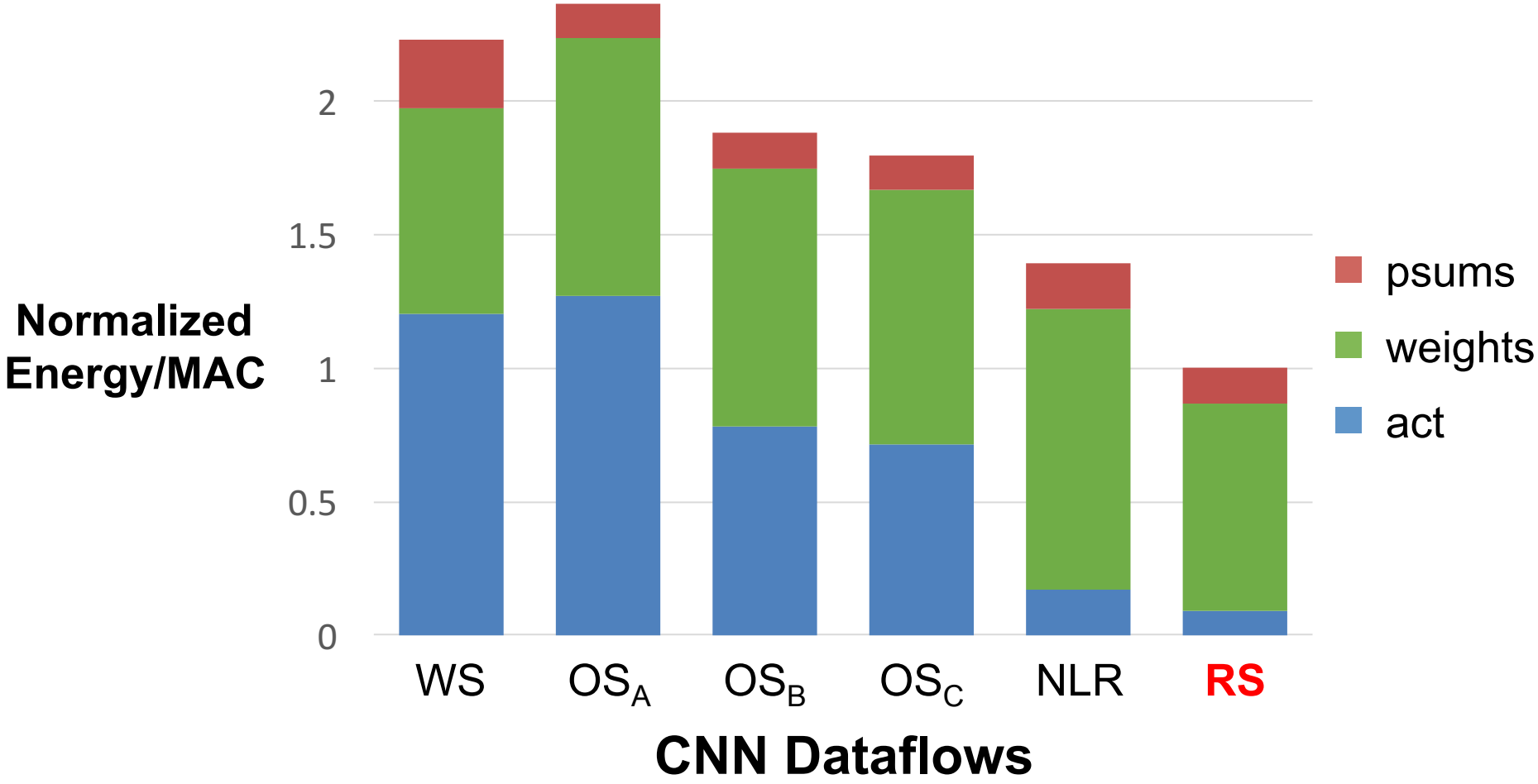

RS uses at least **1.3× lower** energy than other dataflows

Row Stationary: Layer Breakdown

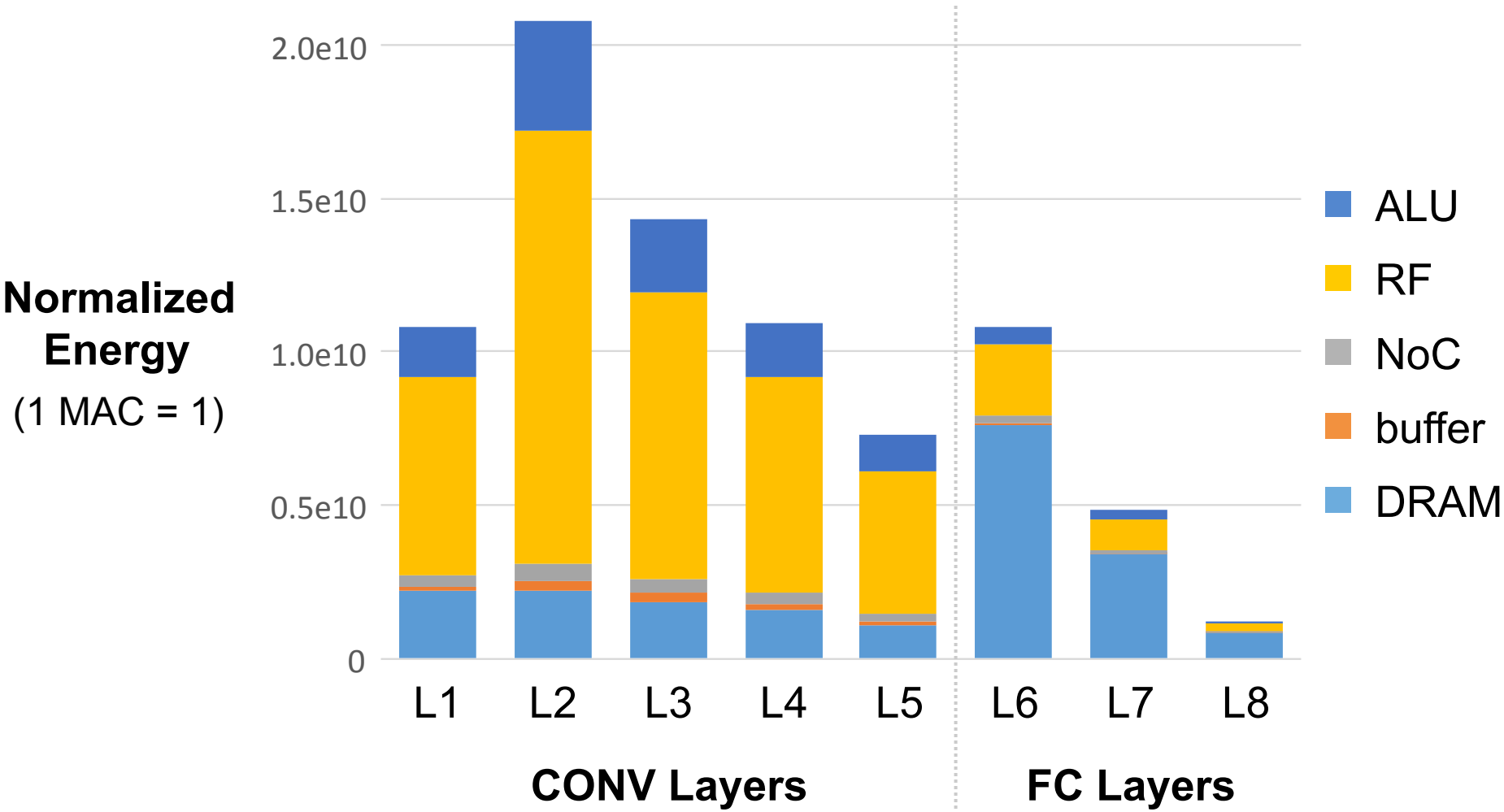

Row Stationary: Layer Breakdown

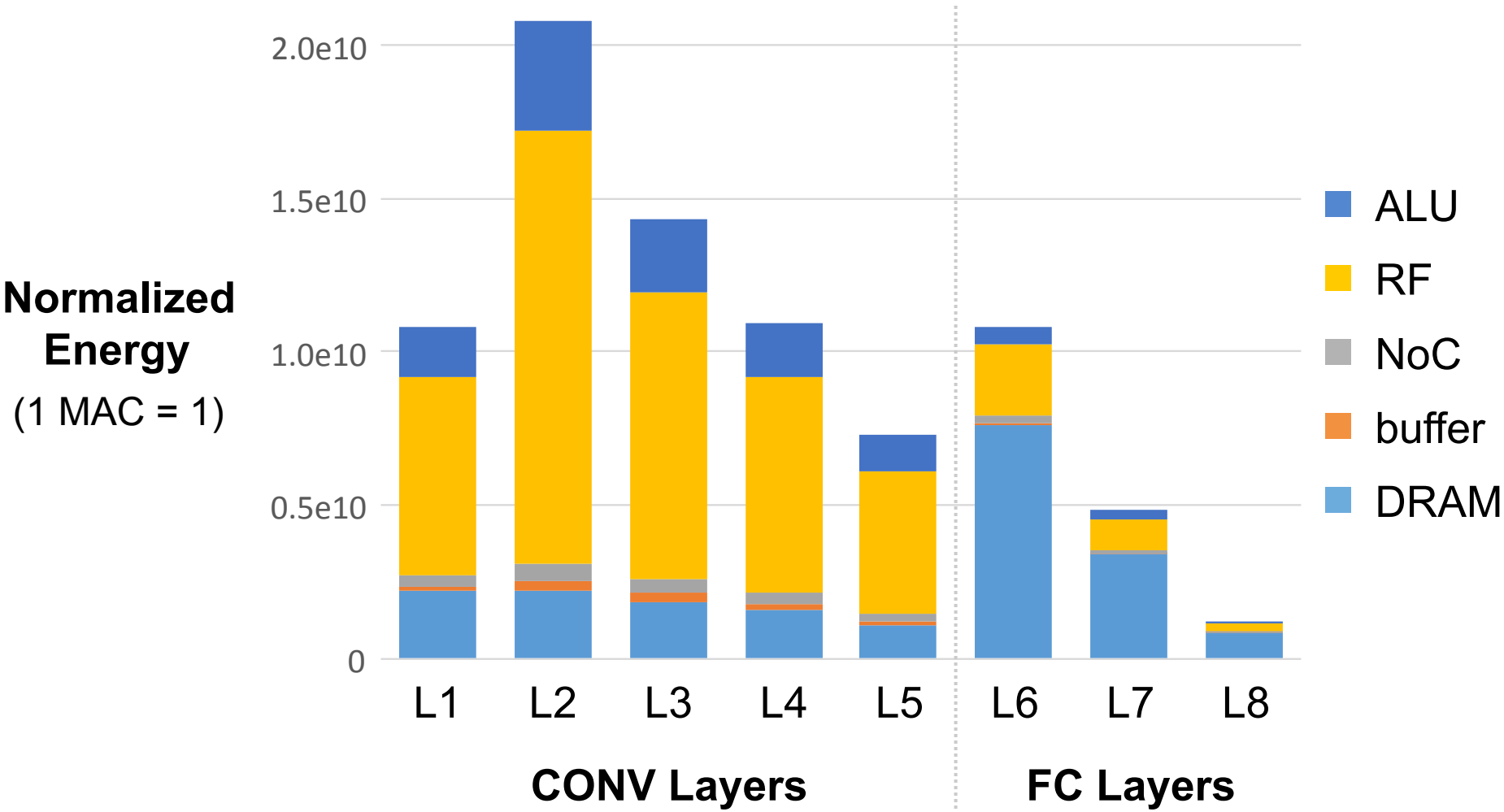

RF dominates

Row Stationary: Layer Breakdown

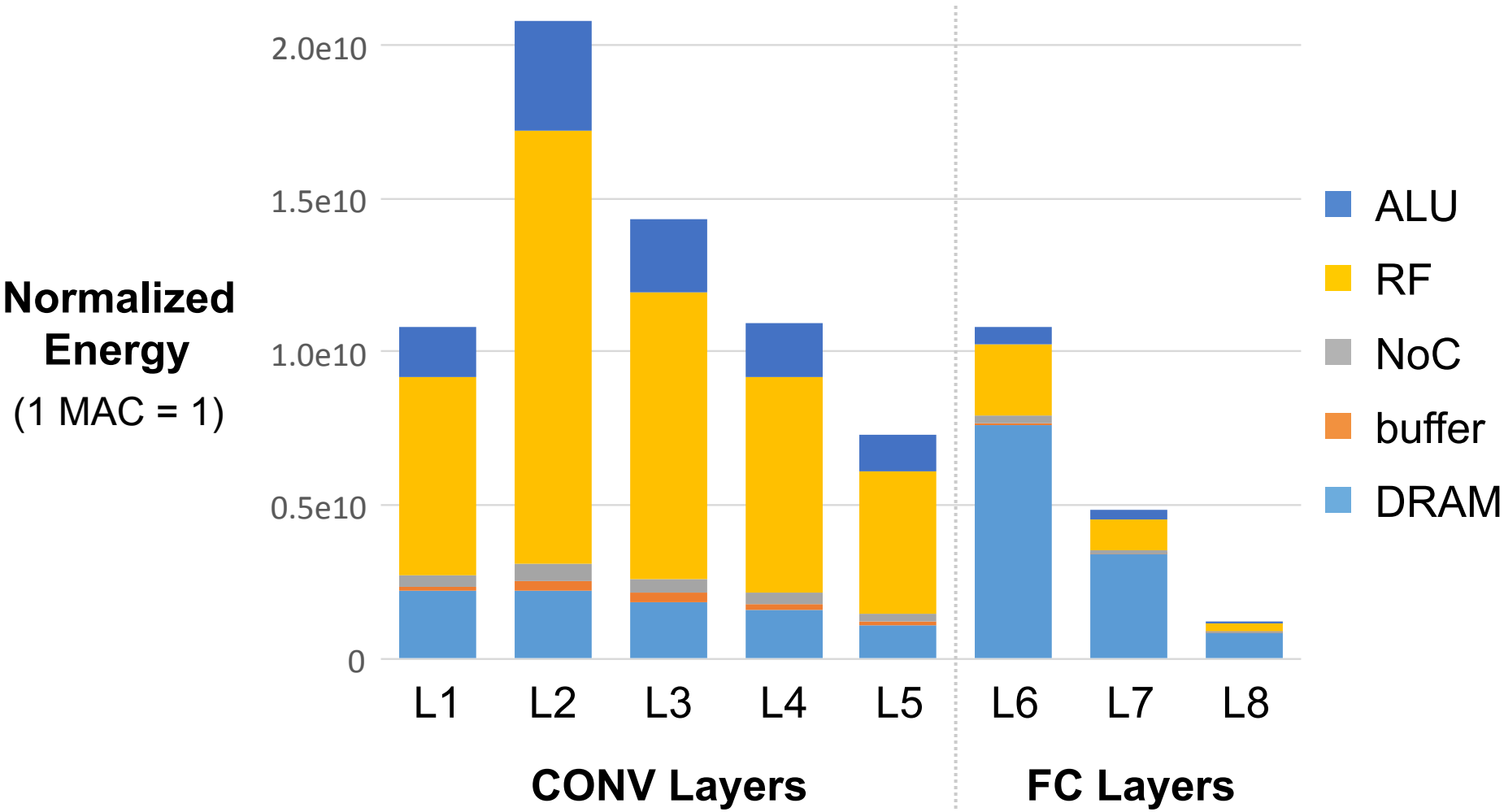

RF dominates

DRAM dominates

Row Stationary: Layer Breakdown

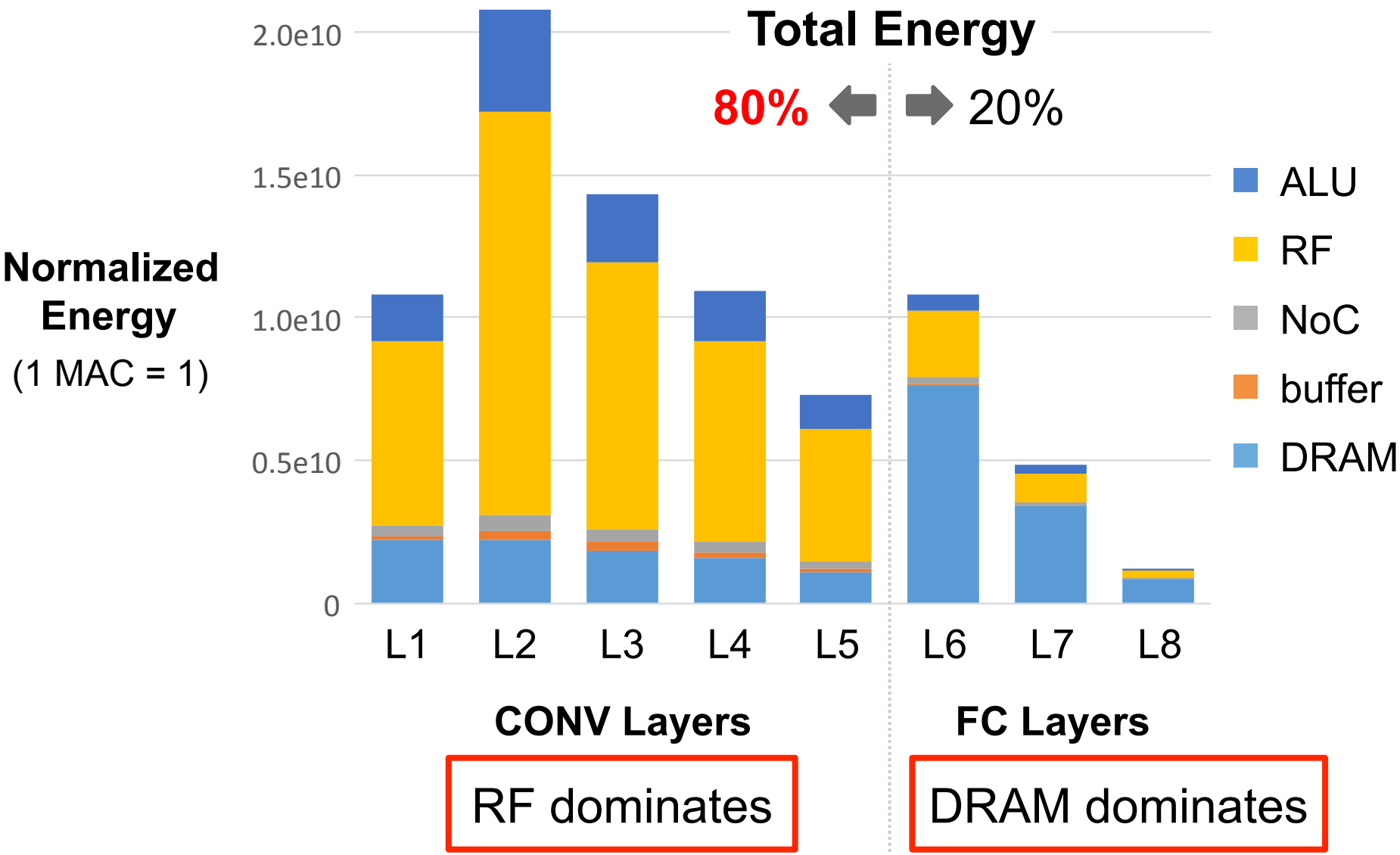

Energy-Efficient Accelerator

Yu-Hsin Chen, Tushar Krishna, Joel Emer, Vivienne Sze, ISSCC 2016

Exploit data statistics

Eyeriss Deep CNN Accelerator

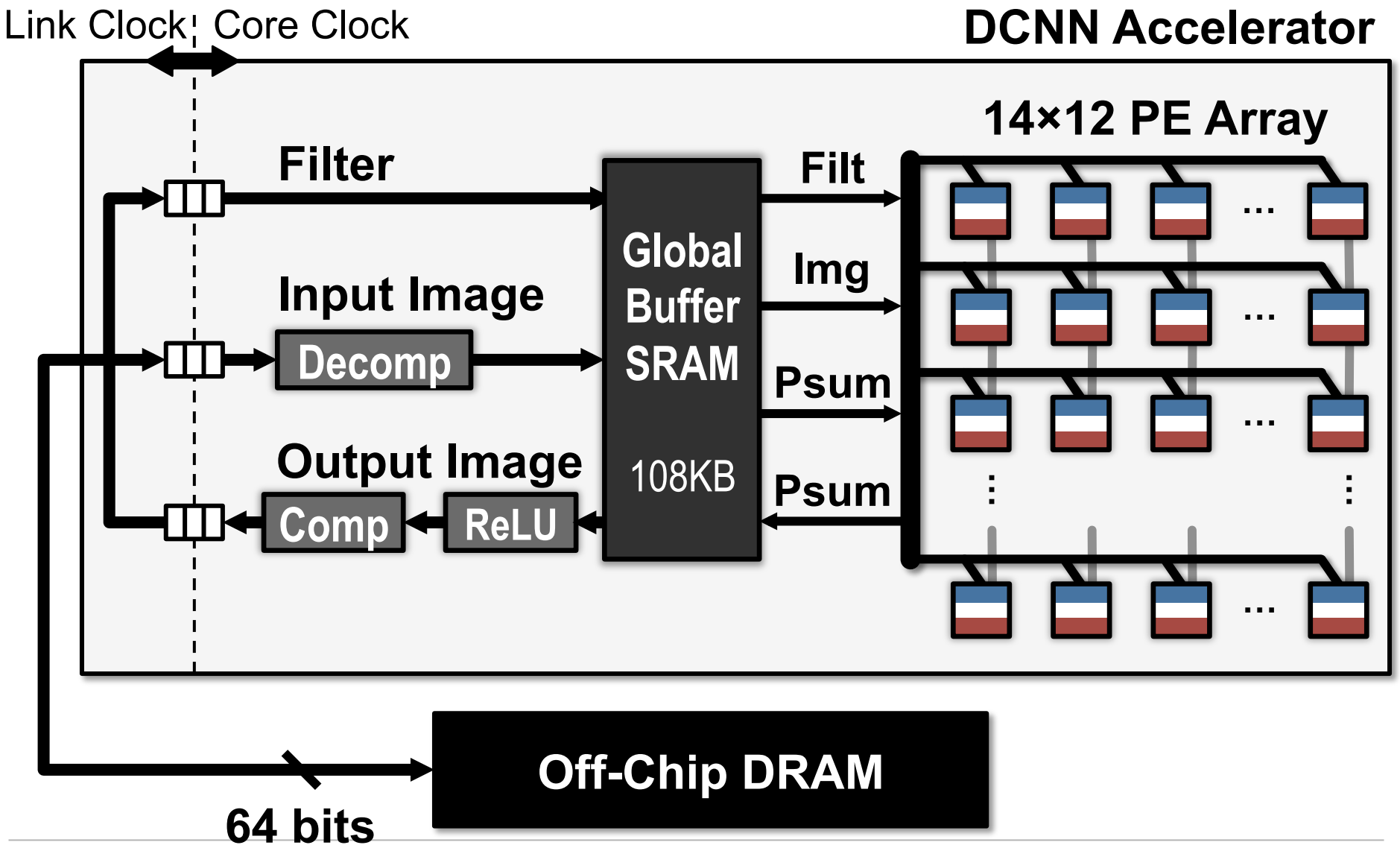

Data Compression Saves DRAM BW

Apply Non-Linearity (**ReLU**) on Filtered Image Data

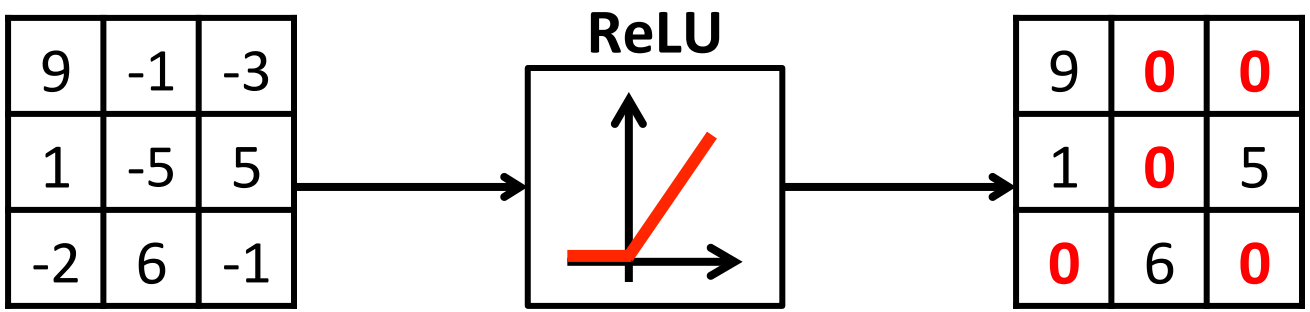

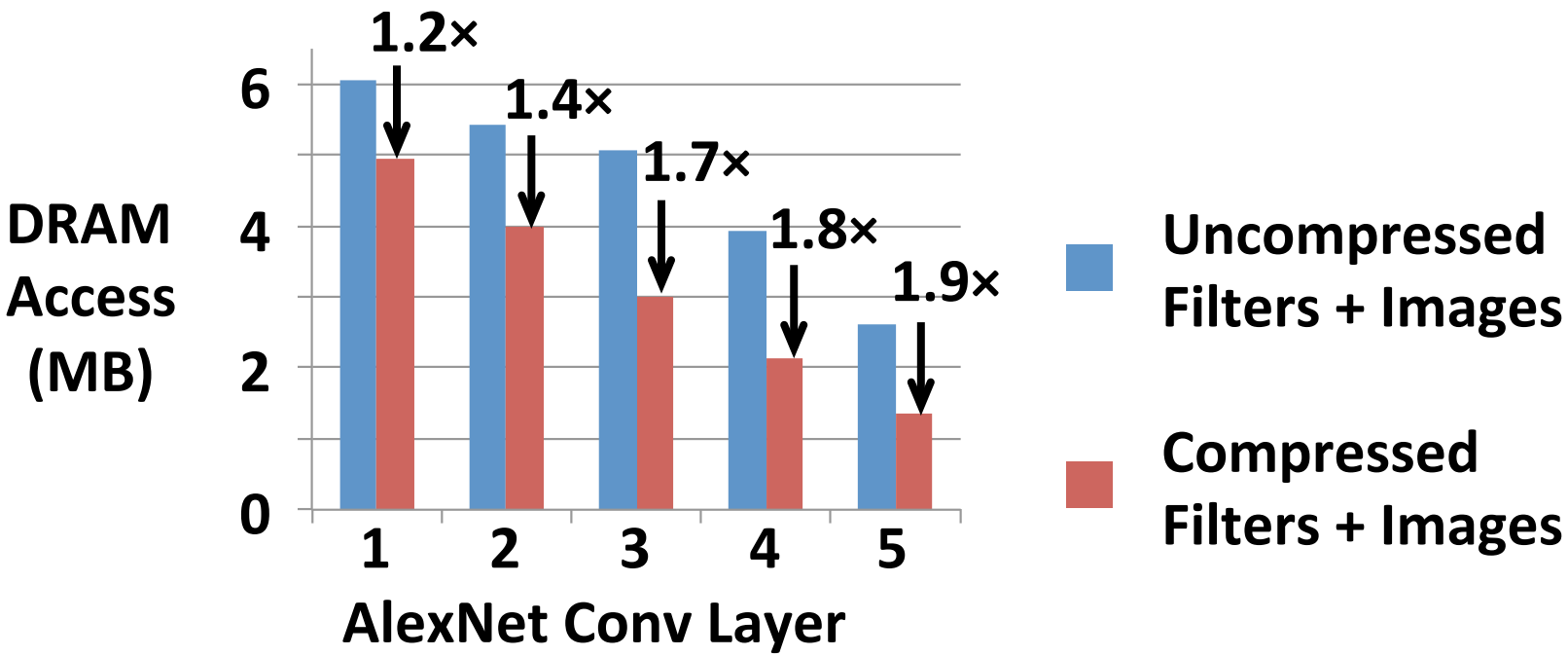

Zero Data Processing Gating

- Skip PE local **memory access**
- Skip MAC **computation**
- Save PE processing power by 45%

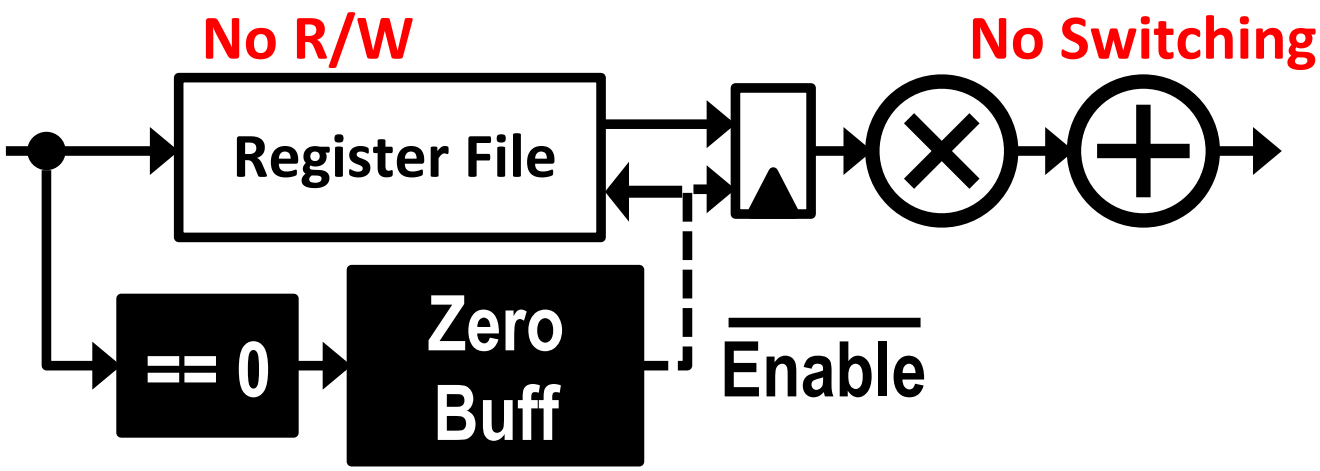

Chip Spec & Measurement Results[1]

Technology	TSMC 65nm LP 1P9M
On-Chip Buffer	108 KB
# of PEs	168
Scratch Pad / PE	0.5 KB
Core Frequency	100 – 250 MHz
Peak Performance	33.6 – 84.0 GOPS
Word Bit-width	16-bit Fixed-Point
Natively Supported CNN Shapes	Filter Width: 1 – 32 Filter Height: 1 – 12 Num. Filters: 1 – 1024 Num. Channels: 1 – 1024 Horz. Stride: 1–12 Vert. Stride: 1, 2, 4

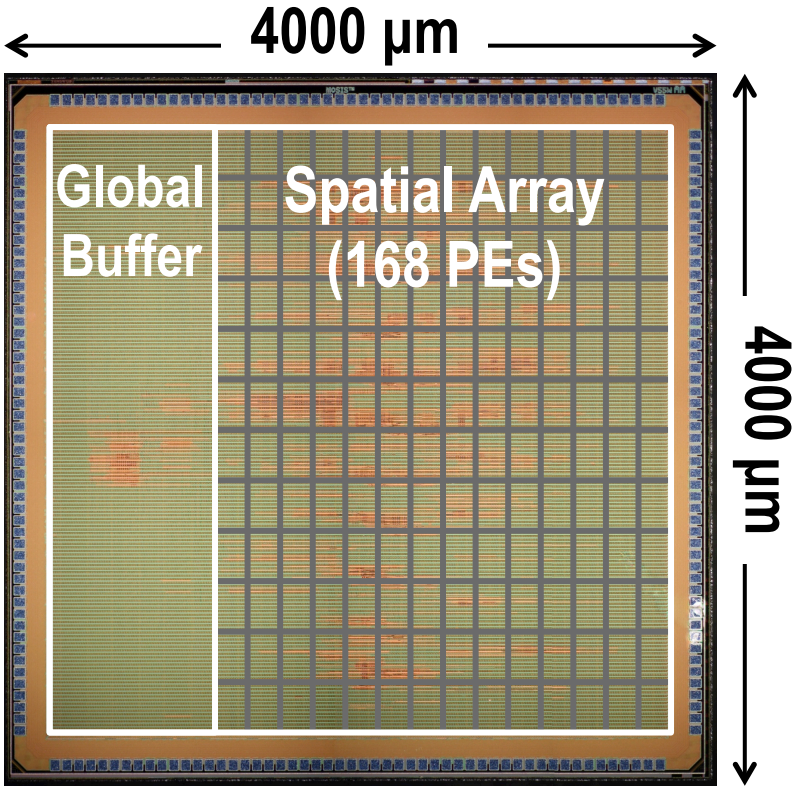

AlexNet: For 2.66 GMACs [8 billion 16-bit inputs (**16GB**) and 2.7 billion outputs (**5.4GB**)], only requires **208.5MB** (buffer) and **15.4MB** (DRAM)

Comparison with GPU

	This Work	NVIDIA TK1 (Jetson Kit)
Technology	65nm	28nm
Clock Rate	200MHz	852MHz
# Multipliers	168	192
On-Chip Storage	Buffer: 108KB Spad: 75.3KB	Shared Mem: 64KB Reg File: 256KB
Word Bit-Width	16b Fixed	32b Float
Throughput[1]	34.7 fps	68 fps
Measured Power	278 mW	Idle/Active[2]: 3.7W/10.2W
DRAM Bandwidth	127 MB/s	1120 MB/s [3]

1. AlexNet Convolutional Layers Only
2. Board Power
3. Modeled from [Tan, SC11]

Demo of Image Classification on Eyeriss

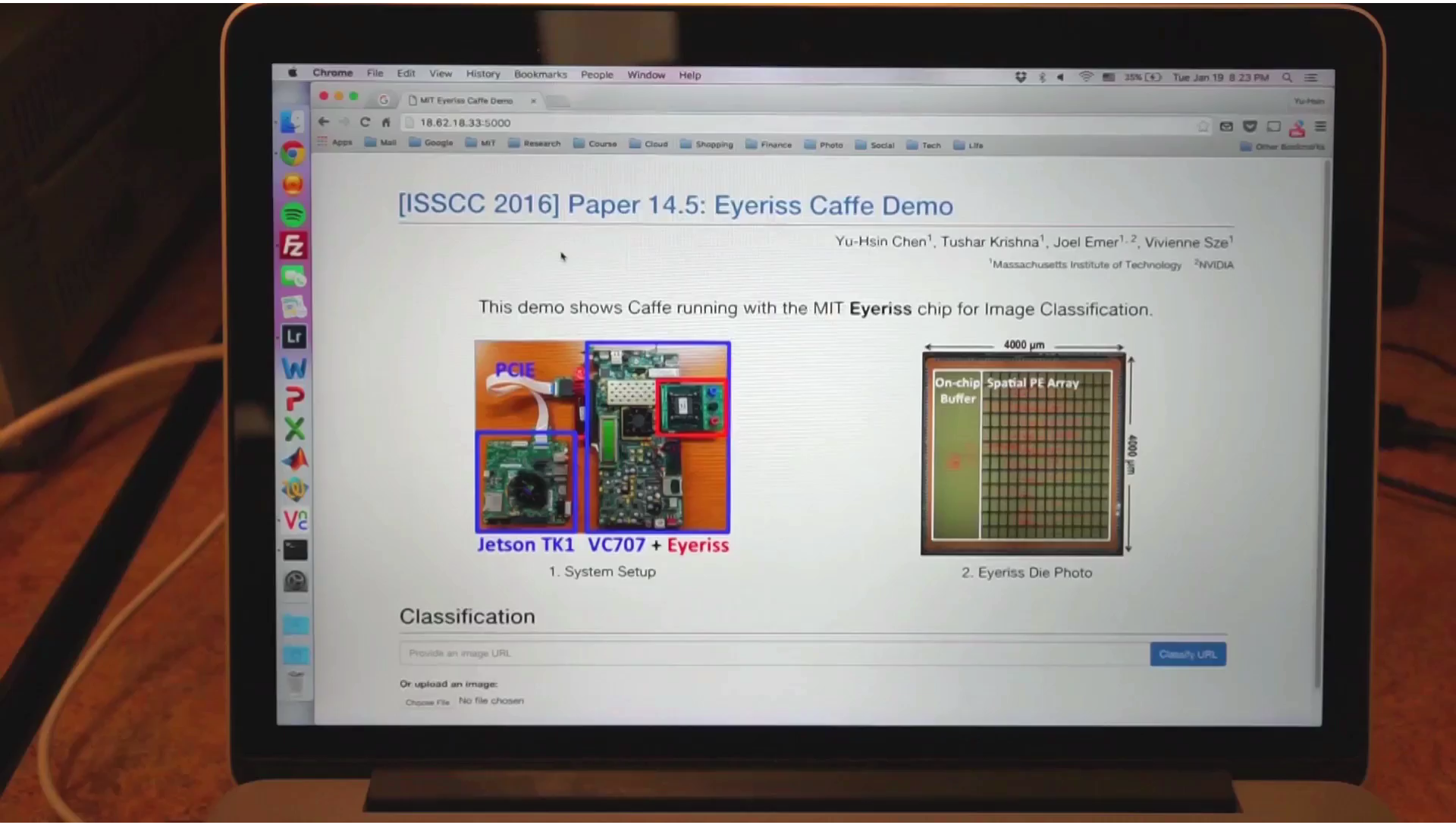

https://vimeo.com/154012013

Integrated with BVLC Caffe DL Framework

Summary of Eyeriss Deep CNN

- **Eyeriss:** a **reconfigurable** accelerator for state-of-the-art deep CNNs **at below 300mW**
- Energy-efficient **dataflow to reduce data movement**
- **Exploit data statistics** for high energy efficiency
- **Integrated** with the **Caffe DL framework** and demonstrated an image classification system

Learn more about **Eyeriss** at

http://eyeriss.mit.edu

Features: Energy vs. Accuracy

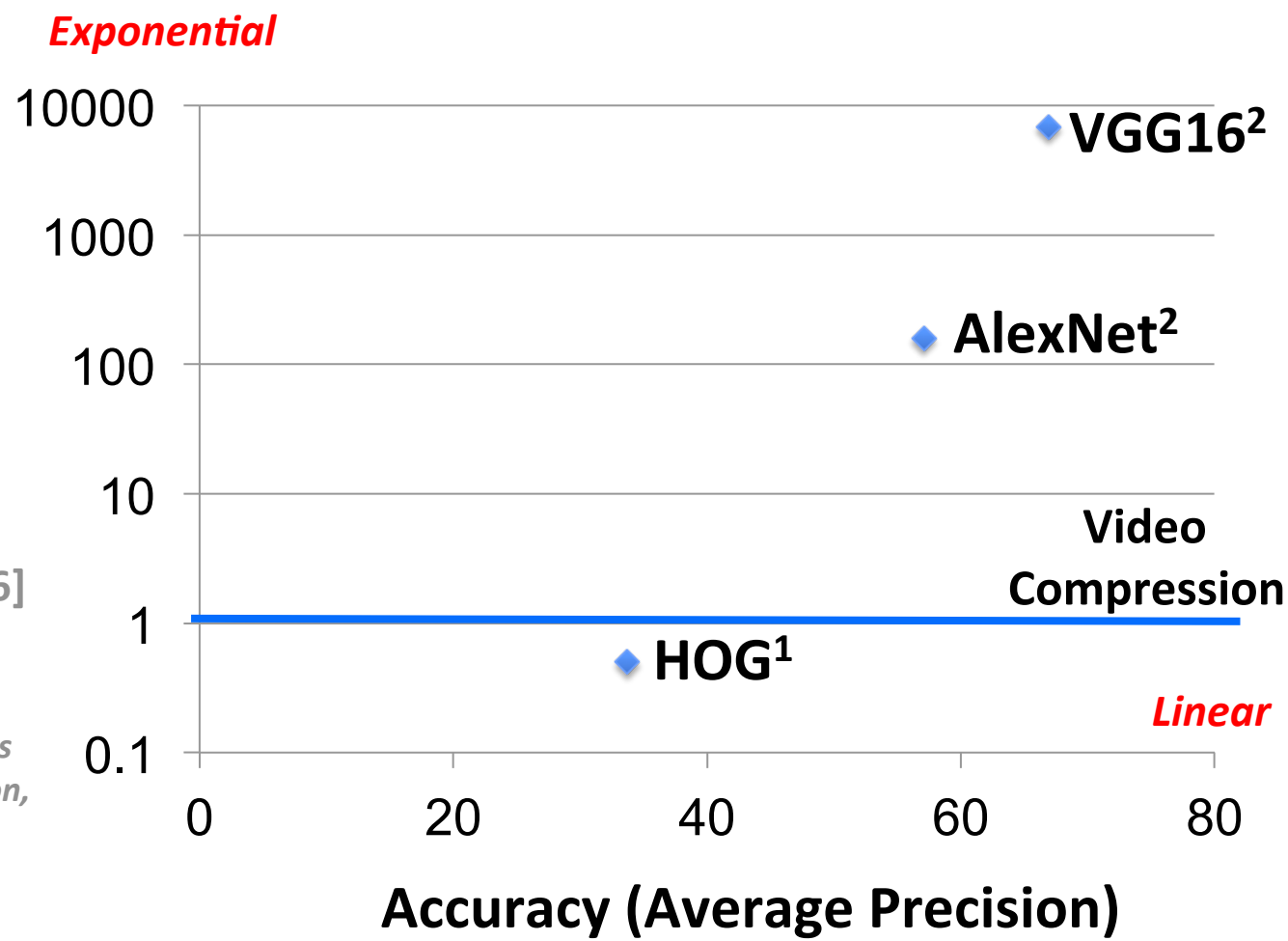

*Measured in 65nm**

1. [Suleiman, VLSI 2016]
2. [Chen, ISSCC 2016]

** Only feature extraction. Does not include data, augmentation, ensemble and classification energy, etc.*

Measured in on VOC 2007 Dataset

1. DPM v5 [Girshick, 2012]
2. Fast R-CNN [Girshick, CVPR 2015]

Designing Energy-Efficient CNNs using Energy-Aware Pruning

Tien-Ju Yang, Yu-Hsin Chen, Vivienne Sze, arXiv 2016

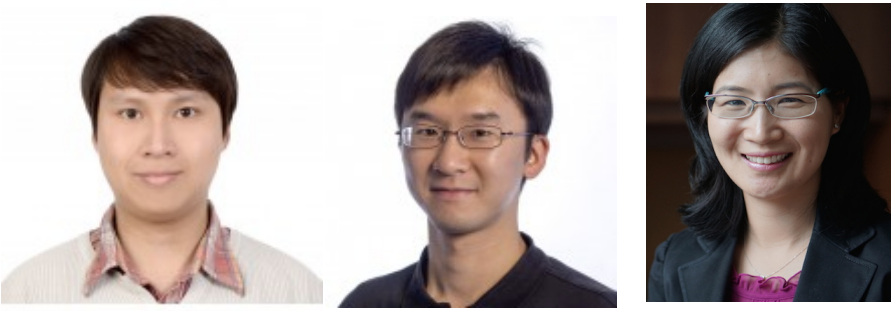

Key Metrics for Embedded DNN

- Accuracy → Measured on Dataset
- Speed → Number of MACs
- Storage Footprint → Number of Weights
- Energy → ?

Energy-Evaluation Methodology

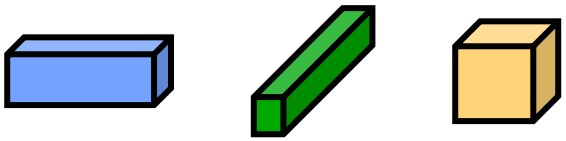

CNN Shape Configuration
(# of channels, # of filters, etc.)

Hardware Energy Costs of each MAC and Memory Access

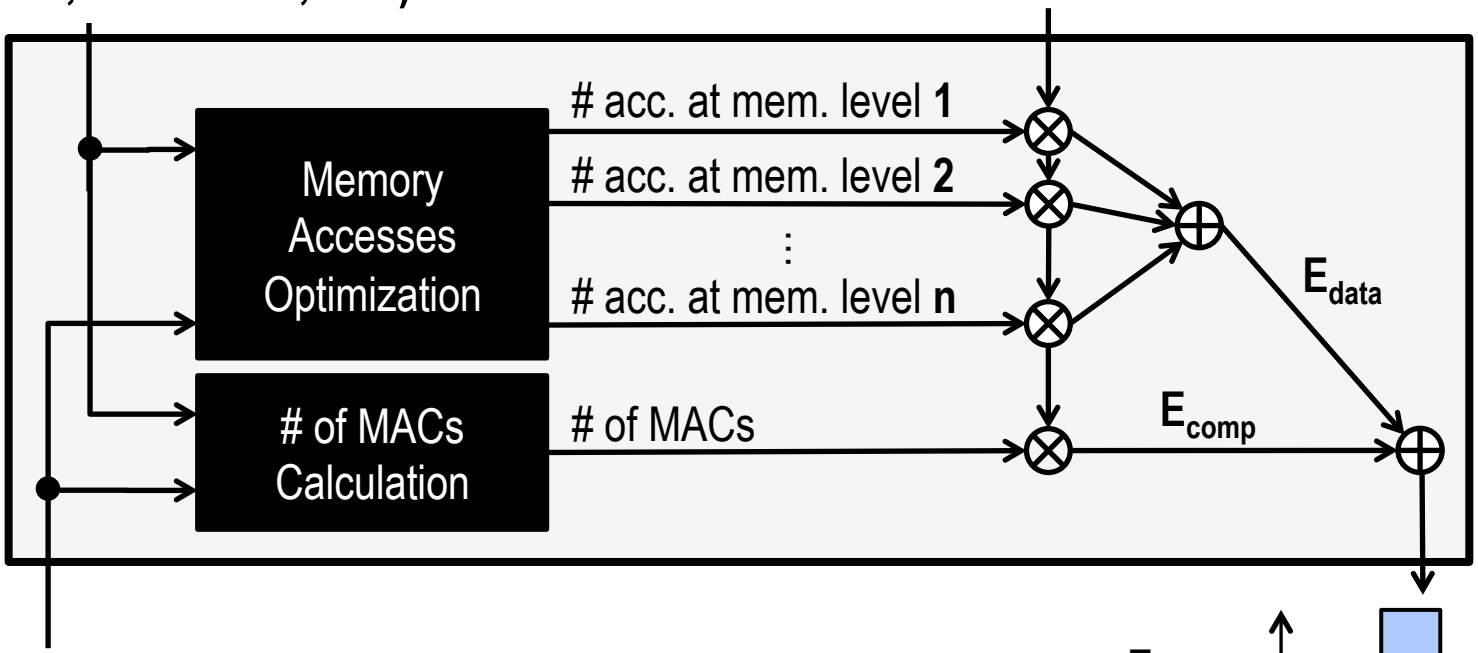

CNN Weights and Input Data

[0.3, 0, -0.4, 0.7, 0, 0, 0.1, …]

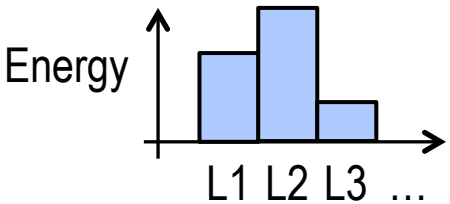

CNN Energy Consumption

Key Observations

- Number of weights ***alone*** is not a good metric for energy
- **All data types** should be considered

Energy Consumption of GoogLeNet

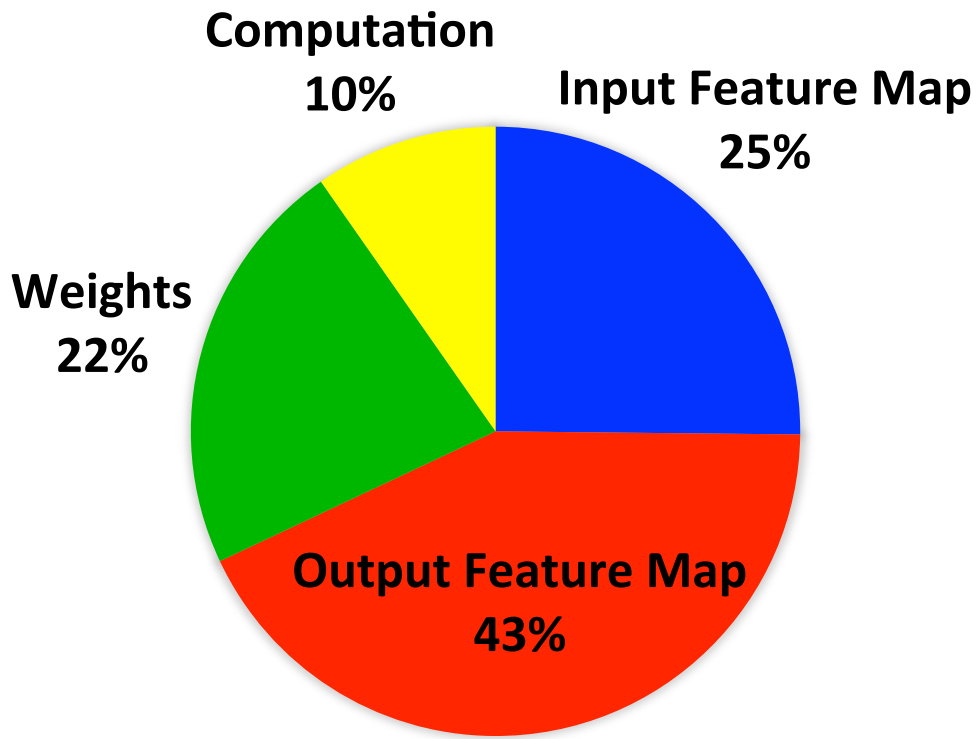

[Yang et al., arXiv 2016]

Energy Consumption of Existing DNNs

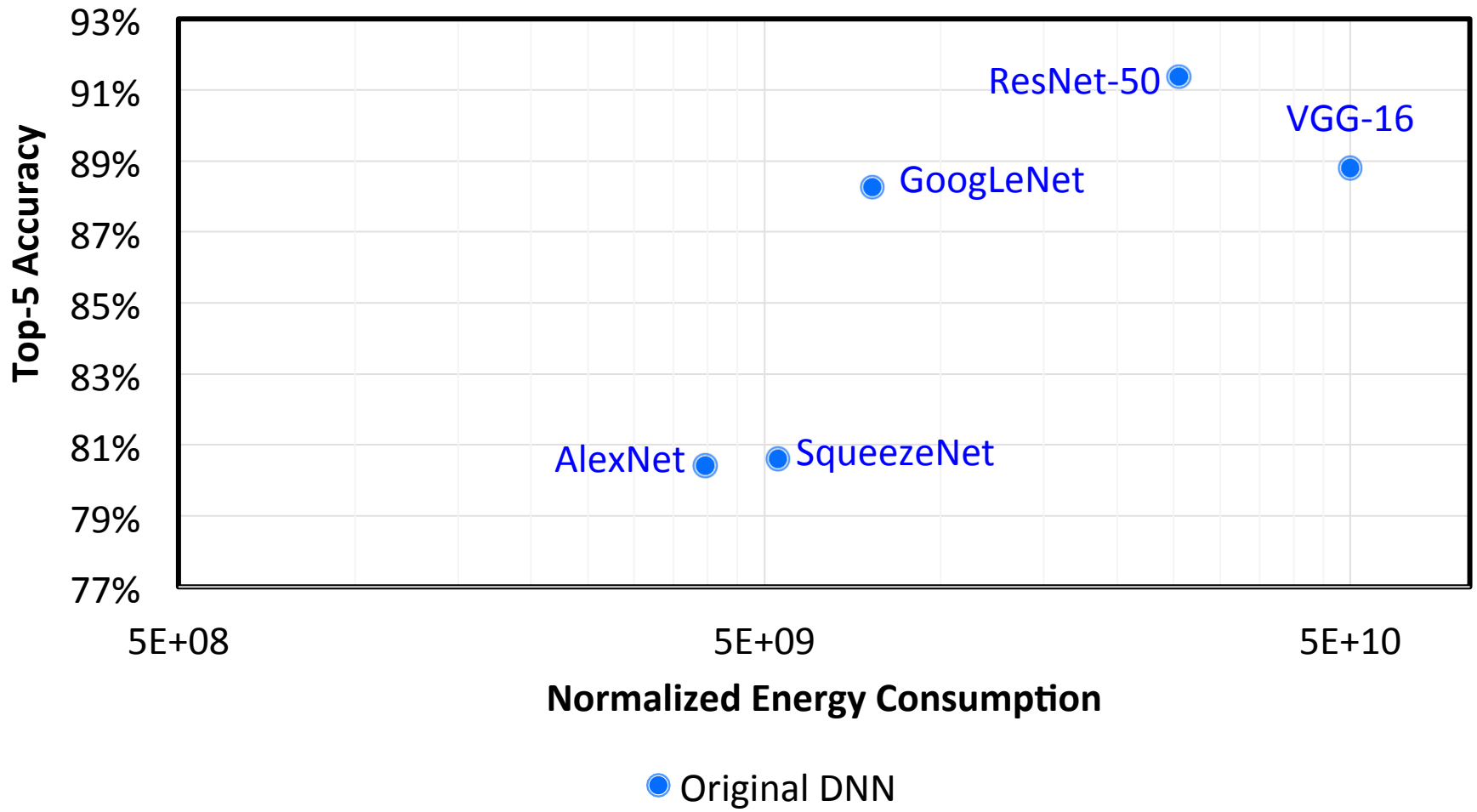

Deeper CNNs with fewer weights do not necessarily consume less energy than shallower CNNs with more weights

[Yang et al., arXiv 2016]

Magnitude-based Weight Pruning

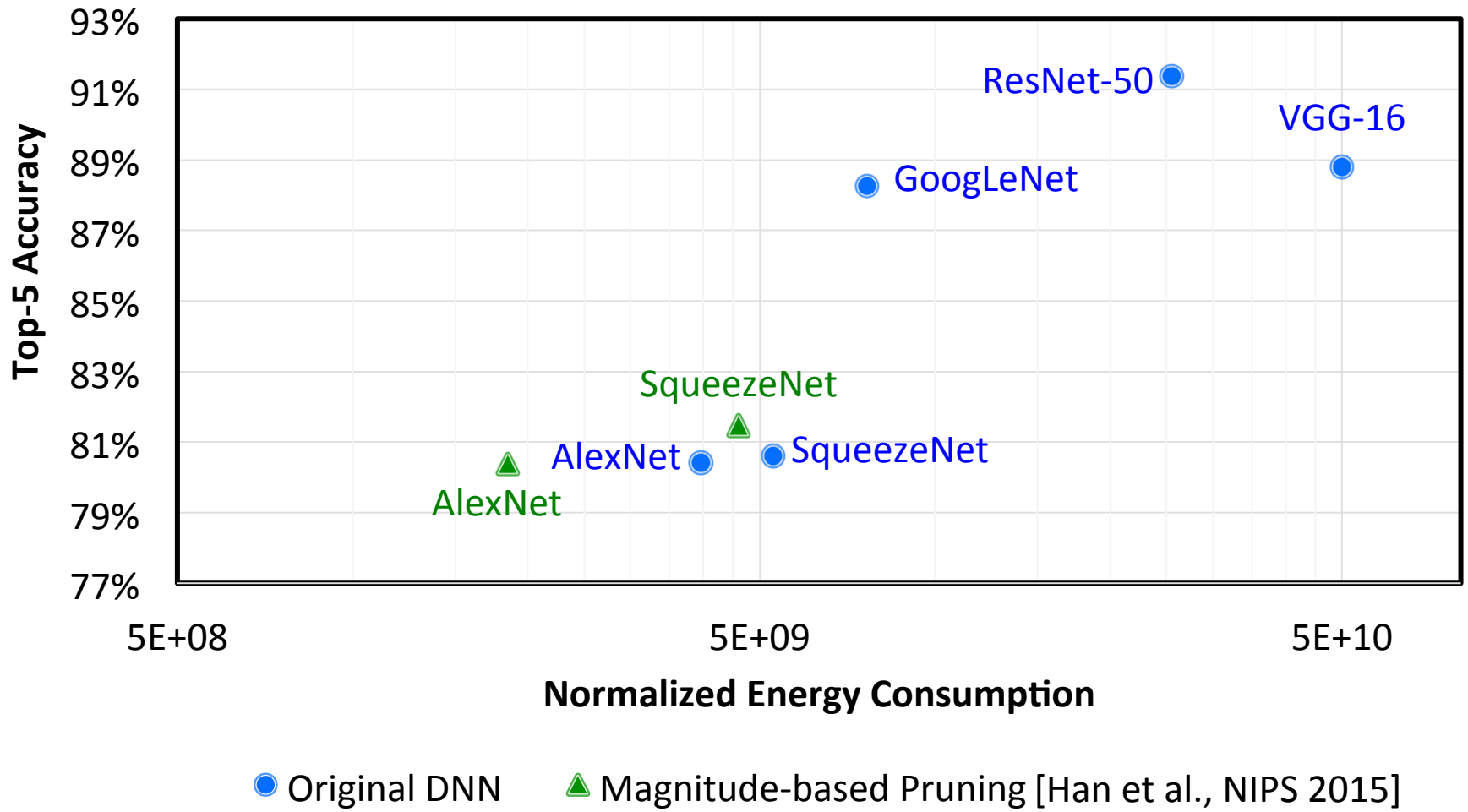

Reduce number of weights by **removing small magnitude weights**

Energy-Aware Pruning

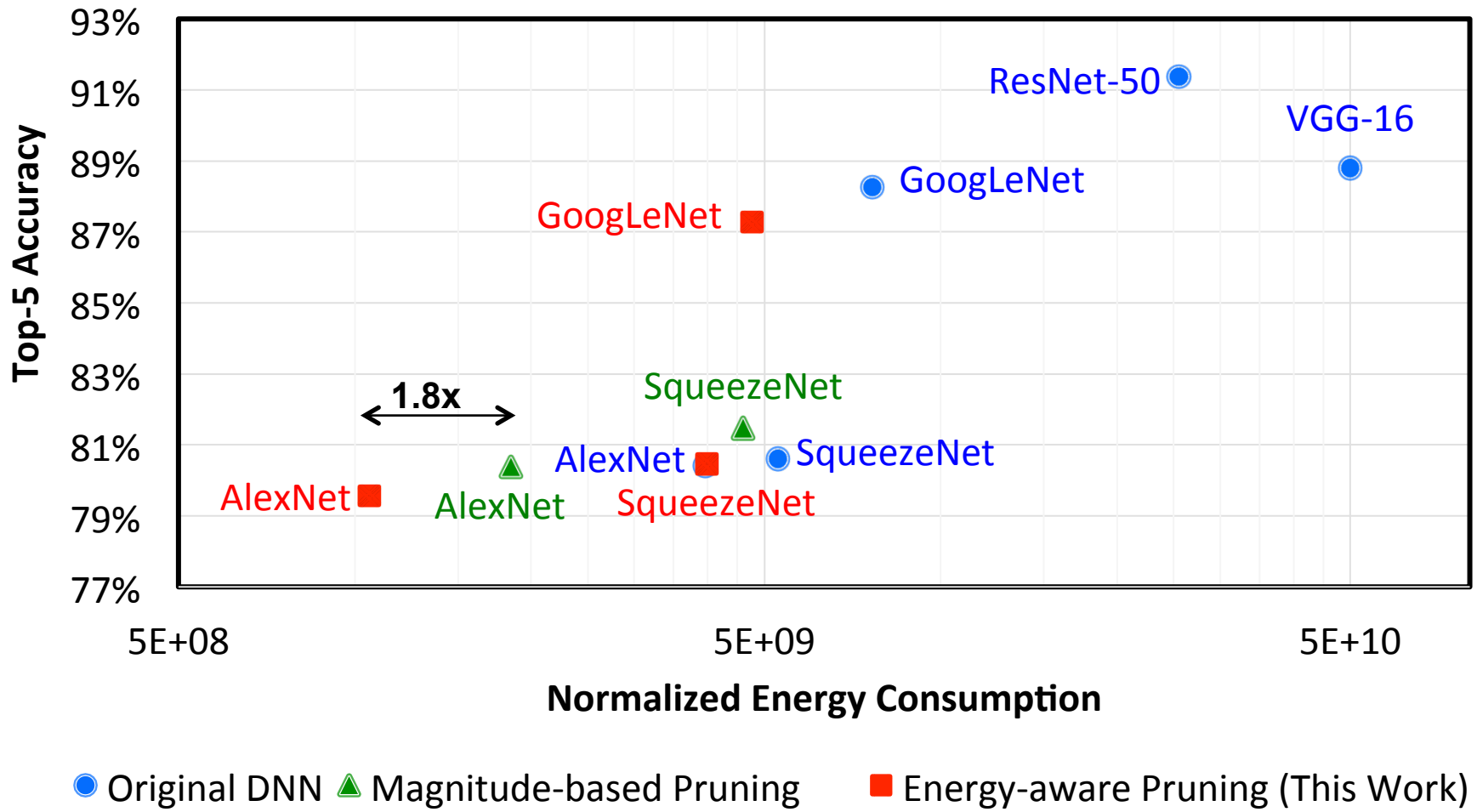

Remove weights from layers **in order of highest to lowest energy**
3.7x reduction in AlexNet / 1.6x reduction in GoogLeNet

[Yang et al., arXiv 2016]

Summary

- **Energy-Efficient Approaches**
  - Minimize data movement
  - Balance flexibility and energy-efficiency
  - Exploit sparsity with joint algorithm and hardware design
- **Joint algorithm and hardware design** can deliver additional energy savings (directly target energy)
- **Linear increase in accuracy** requires **exponential increase in energy**

Acknowledgements: This work is funded by the DARPA YFA grant, TSMC University Shuttle Program, MIT Center for Integrated Circuits & Systems, and gifts from Intel, Nvidia and Texas Instruments.